BEFORE THE PUBLIC UTILITIES COMMISSION

OF THE STATE OF CALIFORNIA

Order Instituting Rulemaking to Consider Whether Text Messaging Services Are Subject to Public Purpose Program Surcharges.	Rulemaking 17-06-023 (Filed June 29, 2017)

OPENING COMMENTS OF CTIA®

GOODIN, MACBRIDE,
SQUERI & DAY, LLP
Jeanne B. Armstrong
505 Sansome Street, Suite 900
San Francisco, California 94111
Telephone: (415) 392-7900
Facsimile: (415) 398-4321
Email: jarmstrong@goodinmacbride.com
Attorneys for CTIA

August 18, 2017

TABLE OF CONTENTS

TABLE OF AUTHORITIES

Page

Statutes

Cases

Decisions of the California Public Utilities Commission

Rules and Regulations

Reports and Orders of the Federal Communicatons Commission

TABLE OF AUTHORITIES
(continued)

Page

Pursuant to the Order Regarding Petition 17-02-006 and Order Instituting Rulemaking to Consider Whether Text Messaging Services Are Subject to Public Purpose Program Surcharges, R. 17-06-023 (July 7, 2017) ("Order"), CTIA respectfully submits these opening comments in the above-captioned proceeding.[1]

I. INTRODUCTION AND SUMMARY

The Commission has long held that Public Purpose Programs ("PPP") surcharges and user fees can be imposed solely on "intrastate *telecommunications* services." As the Commission's Order acknowledges, the Commission thus cannot assess surcharges on text messaging unless text messaging is classified as a "telecommunications" service, rather than an "information service."[2] These terms are well-defined under federal law, and California law has adopted these federal definitions.[3] Indeed, the Commission has stated that it will determine whether text messaging is an information service or a telecommunications service "as such terms are defined in the Communications Act of 1934."[4]

As the attached technical declarations demonstrate,[5] text messaging bears all the hallmarks of an information service under federal law; i.e., "a capability for generating, acquiring, *storing, transforming, processing, retrieving*, utilizing, or making available

---

[1] Pursuant to the July 17, 2017, Email Ruling of ALJ DeAngelis and ALJ *Pro Tem* Kline, opening comments are due August 18, 2017. These Comments are timely filed.
[2] Order, at 1.
[3] *See generally, e.g.,* 47 U.S.C. § 153 (20); *Federal-State Joint Board on Universal Service*, Report to Congress, 13 FCC Rcd 11501 (1998) ("*Report to Congress*"); D.17-07-009 at 3 (applying federal definitions of telecommunications and information service to determine whether entity was required to hold a CPCN); Cal. Rev. & Tax. Code § 42004(k) (the terms "telecommunications services" and "information services" have the same meaning as under federal law).
[4] Order, at 1 and 6 (the Communications Act of 1934, 47 U.S.C. 151 *et seq.*, is herein referred to as the "Act"); s*ee, e.g., TracFone Wireless, Inc.,* D.12-02-032, slip op. at 33-41.
[5] *See* Exhibit A, Declaration of Dr. Hany Fahmy, AT&T Services, Inc. ("Fahmy Declaration"); Exhibit B, Declaration of Jianchong Yang, T-Mobile US, Inc. ("Yang Declaration"); Exhibit C, Declaration of Jerry Kupsch, Verizon ("Kupsch Declaration").

information via telecommunications."[6] *First*, text messaging is a "store-and-forward" technology, in which carriers' servers store messages prior to delivery. This essential data storage feature means that users can communicate via text even when a recipient's device is turned off or not connected to a wireless network. In this way and others, text messaging is akin to e-mail, which the Federal Communications Commission ("FCC") has conclusively defined as an "information service."[7] *Second*, text messaging involves extensive information processing, including protocol conversion. These processing functions are critical to text messaging, as they allow wireless users to exchange messages with users of multiple different platforms, and they help ensure delivery by modifying and transforming messages to comply with the recipient network's or device's criteria for accepting messages. Decades of federal precedent affirm that services offering protocol conversion and other processing functions are "information services" under the Act. *Third*, text messaging allows users to retrieve data by querying electronic databases, such as when a user sends a text message to a short code and receives movie listings or sports scores in return. Text messaging is thus analogous to the "Talking Yellow Pages" service that the FCC held to be an information service.[8]

Although the Commission has not yet addressed the issue of whether text messaging is a telecommunications service or an information service, the Commission's website instructions regarding its Telecommunications and User Fee Filing System ("TUFFS") currently appears to conflate text messaging and two-way messaging, but text messaging is distinct from two-way messaging in every meaningful respect. Two-way messaging is a paging service that lacks the storage, transformation, and processing functions of text messaging service. Unlike text

---

[6] 47 U.S.C. § 153(24) (defining an information service) (emphasis added).
[7] *Report to Congress*, 13 FCC Rcd at 11539 ¶ 78.
[8] *Northwestern Bell Tel. Co.*, Memorandum Opinion and Order, 2 FCC Rcd 5986, 5988
20 (1987).

messages, for example, a two-way message that cannot be received the instant it is dispatched is gone forever. The FCC has long recognized the distinction between two-way messaging and text messaging, and conflation of the two services is erroneous and unsupportable.

Further, even if the Commission were to determine that text messaging was a telecommunications service, which it is not from either a practical or legal perspective, Section 871.5(d) of the California Public Utility Code prohibits the assessment of surcharges to carrier-based text messaging while comparable services (e.g., iMessage, WhatsApp) are not subject to such surcharge obligations. Such an application of surcharges would cause inequity, discrimination, and competitive harm, contrary to that provision of the Public Utility Code.

Moreover, a determination by this Commission that text messaging is a telecommunications service creates the prospect of unique and potentially burdensome proceedings to address what percentage of that traffic is intrastate. To date, neither the Commission nor the FCC has ever determined a percentage of text messaging revenue that is jurisdictionally intrastate, and it is unclear how or whether existing procedures to determine the jurisdiction of voice traffic would be applicable to text messaging or otherwise provide guidance on this issue given the distinct nature of the services.

To be clear, a determination that text messaging is not subject to PPP surcharges and user fees will not affect the funding of those important programs. At minimum, AT&T, Sprint, T-Mobile, and Verizon have consistently treated text messaging as an information service. Thus, these carriers' postpaid customers (and likely many others), who comprise the large majority of the wireless market, do not currently pay surcharges on text messaging, and the revenue base on

which surcharges are established does not include those revenues.[9] A Commission decision affirming that text messaging is an information service will therefore have no impact on the status quo or on the funding for the Commission's PPP programs.

For all the reasons discussed herein, the Commission should adopt a rule clarifying that text messaging services are not subject to PPP surcharges and user fees.

II. TEXT MESSAGING IS NOT AN "INTRASTATE TELECOMMUNICATIONS SERVICE" AND THUS IS NOT SUBJECT TO PPP SURCHARGES AND USER FEES.

Text messaging is an information service, not a telecommunications service, and the industry has treated it as such, at both the federal and state level, for decades. The details in the attached technical declarations, discussed below, demonstrate this. PPP surcharges and user fees, which are imposed *solely* on intrastate end-user *telecommunications* revenues,[10] therefore do not apply to text messaging. The proper classification of text messaging is clear from prior FCC decisions categorizing as information services other services with the same characteristics.

A. The Definitions of Telecommunications Services and Information Services Are Clear, and the Categories Are Mutually Exclusive.

The Act defines "telecommunications" as "the *transmission*, between or among points specified by the user, of information of the user's choosing *without change in the form or content* of the information as sent and received."[11] A "telecommunications service" "means the offering of telecommunications for a fee directly to the public…."[12] This definition encompasses

---

[9] In the Prepaid Mobile Telephony Surcharge Collect Act, the Legislature created a new collection mechanism for *prepaid* wireless services which, unlike other surcharges discussed here, is not tied to "intrastate telecommunications revenues." A.B. 1717 (Ch. 885, Stats. 2014). The Commission's data indicates that the prepaid segment affected by this legislation is only about a quarter of the wireless market. Resolution T-17542 (2016) at 5, chart 1.

[10] *See, e.g., TracFone Wireless, Inc.,* D.12-02-032, at 33-41 (emphasis added).

[11] 47 U.S.C. § 153 (50) (emphasis added).

[12] 47 U.S.C. § 153 (53).

offerings like voice and facsimile services that provide a "simple transmission path" for relaying content.[13] In contrast, the Act defines an "information service" as having "a capability for generating, acquiring, *storing, transforming, processing, retrieving*, utilizing, or making available information via telecommunications."[14] This Commission has applied this same definitional structure,[15] and the California legislature has codified the dichotomy between telecommunications services and information services reflected in federal law.[16]

Importantly, the FCC has unambiguously determined that the terms "telecommunications service" and "information service" are mutually exclusive.[17] Thus, a service may be properly characterized as one or the other, but not both. The Commission acknowledged this mutual exclusivity in its Order, stating that "[w]e recognize, as pointed out by Petitioner, that text messaging is either a telecommunications service or it is an information service but it cannot be both."[18] The Commission's recognition is consistent with the use of the federal definitions in its rules.

B. Text Messaging Is an Information Service, Not a Telecommunications Service.

Text messaging is clearly an information service as it regularly changes the "form" and "content" of information while it is in transit from sender to recipient. "Telecommunications"

---

[13] *Report to Congress*, 13 FCC Rcd at 11538-39.¶ 78 & n.161.
[14] 47 U.S.C. § 153(24) (defining an information service) (emphasis added).
[15] Order, at 1 and 6. *See also, e.g.,* D.17-07-009 at 3 (applying federal definitions of telecommunications and information service to determine whether entity was required to hold a CPCN).
[16] *See, e.g.*, Cal. Rev. & Tax. Code § 42004(k) (the terms "telecommunications services" and "information services" have the same meaning as under federal law).
[17] Report to Congress, 13 FCC Rcd at 11523 ¶ 43 ("[T]elecommunications services and information services are mutually exclusive categories."); *Deployment of Wireline Services Offering Advanced Telecommunications Capability*, 13 FCC Rcd 24011, 24029 para. 34 n. 50 (1998) ("Under the 1996 Act, any service with a communications component must be either a 'telecommunications service' or an 'information service' (but not both).").
[18] Order at 4.

includes only offerings that provide a "simple transmission path" for relaying content.[19] Text messaging service involves much more than a "simple transmission path." Among other things, text messaging can be used to access databases, activate links to websites, and to send multimedia such as pictures, video, and ringtones. In fact, text messaging fits squarely within the definition of an "information service," as it offers, among other things, the following key features: (1) data storage; (2) information processing; and (3) the ability to receive and make available information.

1. Text Messaging Is an Information Service Because "Data Storage" Is a Key Feature.

The FCC has always held that e-mail is an information service because it "utilizes data storage as a key feature of the service offering."[20] Text messaging, which has many of the same characteristics as email, also utilizes data storage as a key feature. Text messaging is an "asynchronous" service that uses storage resources to permit users to send messages regardless of whether the recipient is contemporaneously available.[21] Text messages are routed to carrier or third-party Short Message Service Centers ("SMSCs"), which are essentially computer servers that process and store text messages.[22] Text messages are stored on those servers until they can be delivered to their ultimate destinations.[23] If the intended recipient is not connected to a mobile network because his or her device is deactivated or in an area without wireless network coverage, the message will be stored at the SMSC for hours, days, or even weeks, during which

---

[19] *Report to Congress*, 13 FCC Rcd at 11538-39 ¶ 78 & n.161.
[20] *Report to Congress*, 13 FCC Rcd at 11538-39 ¶ 78.
[21] *See, e.g.,* Fahmy Declaration at 17 ("Text messaging is a store-and-forward service…."); Yang Declaration at 2 ("an SMS message does not provide a real-time service between the sender and the recipient"); Kupsch Declaration at 4-5 ("a subscriber can send a message to another person without any need for the other person to be available to receive it at that time").
[22] *See* Fahmy Declaration at 4; Yang Declaration at 2; Kupsch Declaration at 3. For a detailed description of the mechanics of carrier text messaging, *see* Fahmy Declaration at 4-10; Kupsch Declaration at 2-4.
[23] *See* Fahmy Declaration at 8; Yang Declaration at 2; Kupsch Declaration at 3, 4-5.

time the SMSC will periodically attempt to deliver the message to the recipient's device with no further prompting from, or interaction with, the sender.[24] Even when sender and recipient devices are active and connected to a compatible network, enabling both users to communicate in "close-to-real-time," text messaging remains a store-and-forward service, and hence asynchronous.[25] This asynchronous, store-and-forward capability is at the core of the information service definition. In this respect, text messaging is analogous to e-mail, and voice storage and retrieval services, all of which have long been held to be information services.[26] Indeed, the FCC's rationale in finding e-mail to be an asynchronous information service is especially relevant to this discussion:

> The [e-mail] sender's Internet service provider does not send that message directly to the recipient. Rather, it conveys it to a 'mail server' computer owned by the recipient's Internet service provider, which stores the message until the recipient chooses to access it…. The service thus provides more than a simple transmission path.[27]

The same, of course, is true of text messaging, which routes a text message to an SMSC that can store it for days until it can be delivered to the recipient. Wireless carriers provide this storage

---

[24] *See* Fahmy Declaration at 10 ("If the SME is not available in the network, the SC will store the message until it can be sent"); Yang Declaration at 2 ("The SMSC attempts to send the stored message for up to 72 hours."); Kupsch Declaration at 3 ("Verizon's messaging server attempts to deliver the message for up to five days, if necessary."); *id.* at 4 ("Data storage is a key feature of both SMS and MMS.").

[25] *Report to Congress*, 13 FCC Rcd at 11501 para. 78 n. 162, (1998) ("[I]t is central to the service offering that electronic mail is store-and-forward, and hence asynchronous; one can send a message to another person, via electronic mail, without any need for the other person to be available to receive it at that time").

[26] *Report to Congress*, 13 FCC Rcd at 11538-39 (concluding that e-mail is an information service); *Implementation of the Non-Accounting Safeguards of Sections 271 and 272 of the Communications Act of 1934, as amended*, Report and Order and Further Notice of Proposed Rulemaking, 11 FCC Rcd 21905, 21975 (1996) (subsequent history omitted) ("*Non-Accounting Safeguards Order*") (concluding that tele-messaging is an information service); *United States v. Western Electric Co., Inc.*, 627 F. Supp. 1090, 1110 n.89 (D.D.C. 1986) (subsequent history omitted) (noting that voice storage services are features that allow subscribers to store, retrieve, and send messages). *See also* Fahmy Declaration at 1 ("Text messaging … is essentially a mobile version of email….").

[27] *Report to Congress*, 13 FCC Rcd at 11538-39 ¶ 78 & n.161.

function as an integrated feature of text messaging service.[28] Thus, just like other information services, text messaging inherently involves the "storing" of information.

Text message storage is a critical, integral component of text messaging. Storage of messages is inherent to text messaging as a medium of communication, not merely a feature implemented for network management or user convenience; and storage of text messages is often necessary to complete a customer's communication (for instance, when a text message recipient's phone is turned off overnight).

2. Text Messaging Is an Information Service Because It Involves "Processing" and "Transforming" Information.

Text messaging service also includes "processing" and "transforming" of information, including dividing, truncating, or converting messages into a different formats or protocols. In terms of the Act's information service definition, text messaging services "offer … a capability for … transforming [and] processing" messages, which "change[s]" the messages' "form or content as sent and received."[29] Different wireless carriers use different text messaging protocols.[30] For this reason, when carriers first deployed text messaging capabilities, customers could send messages only to other customers of the same carrier.[31] Later, carriers and third-party vendors developed techniques to convert messages among the disparate messaging protocols. Today, mobile subscribers may exchange messages not only with other mobile subscribers but

---

[28] Whether a feature is an integrated part of a single service is determined based on what the provider "offers." *See, e.g., Nat'l Cable & Telecomms. Ass'n v. Brand X Internet Servs.,* 545 U.S. 967, 988-91 (2005).
[29] 47 U.S.C. § 153 (24) (2016).
[30] *See* Fahmy Declaration at 10-11; Yang Declaration at 3 ; Kupsch Declaration at 5-6.
[31] *Universal Service Contribution Methodology A National Broadband Plan for Our Future*, Comments of T-Mobile, FCC, WC Docket No. 06-122, at 4 (June 6, 2011) ("T-Mobile FCC Comments"); *see also* CTIA InterCarrier Messaging Guidelines, http://sf8.colo.ctia.org/policy-initiatives/voluntary-guidelines/messaging-interoperability-sms-mms.

also with users of e-mail services, over-the-top applications, or computer-based IM accounts.[32] This advanced cross-platform interoperability likewise requires significant protocol processing and conversion. As T-Mobile explained in response to an FCC request for public comment regarding the assessment of certain services for USF contributions:[33]

> When users send SMS messages from their … mobile devices to an e-mail or instant messaging account, the short message service center ("SMSC") routes the message to an Internet gateway, which translates the message into the appropriate protocol. SMS messages generally originate or terminate on the mobile device in short message peer-to-peer protocol ("SMPP") or MM7 (a protocol associated with [multimedia] messaging service ("MMS")). E-mail messages are generally formatted in simple mail transfer protocol ("SMTP") and IMs are generally formatted in Transmission Control Protocol/Internet Protocol ("TCP/IP"). Therefore, messages exchanged between an SMS platform and an e-mail or IM platform must be translated from one protocol to another.[34]

Decades of federal precedent affirm that services offering protocol conversion are "information services"[35] or, as they were known before the Communications Act was amended in 1996, "enhanced services."[36] That year, the FCC concluded that the pre-1996 definition of "enhanced services" involving protocol conversion was equivalent to the newly-defined "information services"—despite apparent differences in wording—because such conversion

---

[32] *See, e.g.,* Fahmy Declaration at 2.

[33] *Wireline Competition Bureau Seeks Comment on Request for Guidance Filed by the Universal Service Administrative Company*, Public Notice, 26 FCC Rcd 6745 (2011), https://apps.fcc.gov/edocs_public/attachmatch/DA-11-853A1_Rcd.pdf; Letter from Richard A. Belden, Chief Operating Officer, USAC, to Sharon Gillett, Chief, Wireless Competition Bureau, FCC, WC Docket No. 06-122 (Apr. 26, 2011), *available at* https://ecfsapi.fcc.gov/file/7021346734.pdf.

[34] T-Mobile FCC Comments at 4 (internal citations omitted).

[35] 47 U.S.C. § 153(24) (defining "information service").

[36] The FCC has determined that "the differently-worded definitions of 'information services' and 'enhanced services' … should be interpreted to extend to the same functions." *Non-Accounting Safeguards Order*, 11 FCC Rcd at 21955-56 ¶ 102 (1996) (subsequent history omitted). *See also id.* at 21956-58 ¶¶ 104-07; *Report to Congress*, 13 FCC Rcd at 11527 ¶ 51; *Vonage Holdings Corporation v. FCC*, 489 F.3d 1232, 1241 (D.C. Cir. 2007).

involved the "transforming" of information.[37] Indeed, the protocol conversion involved in translating a text message across platforms is exactly the sort contemplated by the FCC in defining an information service: "'Protocol conversion' refers specifically to the specific form of protocol processing that is necessary to *permit communications between disparate terminals or networks*."[38] Because protocol conversion or processing consistently has been identified as a hallmark of an information service and its predecessor, an enhanced service, text messaging is an information service.

"Processing" a text message also continues after the message has undergone net protocol conversion: e-mail (SMTP), instant-messaging (TCP/IP), and multimedia messaging (MM7) protocols transform, modify, and display messaging content in a manner different from SMPP, the traditional Short Message Service ("SMS") text messaging protocol. These other protocols use different fields and formats than SMS messages, among many other technical differences.[39] Text messages often contain additional headers designed for wireless use, such as callback numbers, which must be modified or stripped when the content is sent to an e-mail or IM platform. Likewise, an e-mail contains a "Subject" line that is absent from a text message. To

---

[37] *See, e.g.*, *Non-Accounting Safeguards Order*, 11 FCC Rcd at 21956-58 ¶ 104-07 (1996) (finding that services involving protocol conversion are "enhanced", *i.e.*, information, services because they perform the transforming and processing of information) (emphasis added); *Report to Congress*, 13 FCC Rcd at 11527 (noting that "services employing protocol processing were treated as information services under the MFJ").

[38] The FCC first enunciated this definition in the 1995 *Frame Relay Order*. *See Independent Data Communications Manufacturers Ass'n, Inc.*, Memorandum Opinion and Order, 10 FCC Rcd 13717, 13717-18 n.5 (1995) ("*Frame Relay Order*") (emphasis added). The FCC has since employed that definition in several orders. *See, e.g.*, *Non-Accounting Safeguards Order*, 11 FCC Rcd at 21955 n.229 (1996); *Implementation of the Telecommunications Act of 1996; Telecommunications Carriers' Use of Customer Proprietary Network Information and Other Customer Information; Implementation of the Non-Accounting Safeguards of Sections 271 and 272 of the Communications Act of 1934, As Amended*, Order on Reconsideration and Petitions for Forbearance, 14 FCC Rcd 14409, 14435 n.134 (1999).

[39] *See, e.g.,* Fahmy Declaration at 6; Yang Declaration at 3; Kupsh Declaration at 5-6.

make the two systems compatible, a carrier's SMS platform must remove this information from an e-mail message as it converts the message into SMPP.

Moreover, because different wireless technologies accommodate different-sized text messages, text messaging providers must reformat and even subdivide messages that exceed the number of characters the recipient's network or device is able to accept.[40] For example, if a text message includes more than 160 characters, the sender's wireless device will subdivide that message into several shorter messages and send those messages to the SMSC individually. If the recipient's device is capable of receiving text messages that exceed 160 characters, the SMSC will forward the subdivided message with metadata that tells the recipient's device the order in which to place each segment. The recipient's device will then combine the segments and the message will appear, to the recipient, as a single message. In this way, wireless providers' servers store, process, and transform text messages.

In addition, many carriers offer other "processing" capabilities that occur even after a message has been delivered: Sprint, for example, has offered a service whereby text messages sent from a mobile phone to a wireline phone are converted, i.e., "transformed," to voice messages and automatically read to the recipient when he or she answers the phone.[41] Some carriers also permit mobile message senders to request a message delivery confirmation, which may require "processing" data concerning the status of the delivery and "generating" a confirmation message for the sender once the message has been identified as delivered.

As described above, these changes to the protocols, content, and format of text messages do not simply occur during transit. Rather, they are "net" changes that result in messages being

---

[40] *Id.*

[41] *Universal Service Contribution Methodology A National Broadband Plan for Our Future*, Comments of Sprint, WC Docket No. 06-122 at 3 (filed June 6, 2001) ("Sprint FCC Comments"), https://ecfsapi.fcc.gov/file/7021685859.pdf.

received in a fundamentally different form than that in which they are sent, and, in some instances, on fundamentally different networks from that on which they originate. As a result, they are the types of transformations of the information that define an information service.[42]

Text messaging, in sum, does not passively relay content like telecommunications services; it processes content to facilitate cross-platform interoperability (when necessary) and enable additional services.

3. Text Messaging Is an Information Service Because It Involves "Retrieving" Information and "Making Information Available."

Like other information services, text messaging also enables users to query electronic databases and retrieve data. To the end user, this functionality offers the capability for acquiring or "retrieving" information in text message form; to the content provider, it offers the capability for "making available information."[43] By way of illustration, a user can send a text message to a five- or six-digit short codes to retrieve information on sports scores, weather reports, movie times, or other information, receiving in return a standard text message containing information from the queried database.[44] Short codes can also be used by wireless consumers to make charitable donations.

The FCC has long considered such information-retrieval capabilities to be a hallmark of an enhanced or information service.[45] For example, the FCC found that a "Talking Yellow

---

[42] *See, e.g., Petition for Declaratory Ruling that AT&T's Phone-to-Phone IP Telephony Services Are Exempt from Access Charges,* Order, 19 FCC Rcd 7457 (2004) ("*IP-in-the-Middle Order*") (distinguishing between protocol conversions that occur solely in transit and "net" protocol conversions).
[43] 47 U.S.C. § 153(24) (defining "information service").
[44] Yang Declaration at 4 ("Examples include sending an SMS to short codes to receive information about flight information, stock alerts, receive grocery coupon codes, ask questions to a conference call, or register a vote on a designated poll."); *see also* Kupsch Declaration at 7.
[45] *See, e.g.*, *U.S. WEST Communications, Inc.*, Petition for Computer III Waiver, 11 FCC Rcd 7997, 8003 12 (CCB 1996) (finding that providing "access to a database for purposes other than to obtain the information necessary to place a call will generally be found to be an enhanced service"); *Northwestern*

Pages" service that permitted users to place a call and hear a recorded advertisement "involves 'subscriber interaction with stored information,' and falls neatly within the definition of 'enhanced service.'"[46] This example illustrates how a telephone call–which would otherwise be considered an ordinary telecommunication—is transformed into an information service simply because the subscriber is interacting with stored data. Although SMS is text-based rather than voice-based, for definitional purposes it mirrors the storage and retrieval functionalities of the Talking Yellow Pages. By sending information to, and receiving information from, the SMSC, text messaging users are interacting with stored data. Like the Talking Yellow Pages, text messaging must therefore be categorized as an "information service."

C. Text Messaging and "Two-Way Messaging" Are Two Different and Distinct Services.

For many years, the "CPUC Telephone Surcharge Reporting and Payment Filing Directions" on the Commission's website has included a list of services subject to assessment.[47] The list included, among others, wireline services, wireless services, and "two-way messaging." The petition requesting this proceeding was necessitated after the online list of services subject to assessment was modified on March 9, 2016, such that it now reads "two-way messaging (text messaging)." This action purported to expand the definition of two-way messaging to include a separate service offering, text messaging.

Despite the common use of the word "messaging," the two terms describe two separate and distinct offerings made into different markets, selected by different consumers, and using

---

Bell Tel. Co., Petition for Declaratory Ruling, 2 FCC Rcd 5986, 5988 (1987) (concluding that a "Talking Yellow Pages" offering is an enhanced service).

[46] *Northwestern Bell Tel. Co.*, Memorandum Opinion and Order, 2 FCC Rcd 5986, 5988¶ 20 (1987).

[47] Telecommunications Surcharges and User Fees, http://www.cpuc.ca.gov/surcharges/ (last visited August 3, 2017).

different underlying technologies. Any attempt to conflate the two would be factually incorrect and legally misguided.

By way of background, the term "two-way messaging" was coined around 1992 to describe narrowband two-way paging services, which augmented one-way paging technology by permitting the recipient of a page to send a short reply message back to the original sender. Two-way messaging has long been listed on the TUFFS website as a service subject to PPP surcharges and user fees.

Crucially, unlike text messaging, two-way messaging lacks any storage capability and does not otherwise transform, process or retrieve information. For example, if a narrowband two-way message cannot be received by the recipient's device at the moment that it is dispatched, it is lost. In contrast, as discussed above, text messaging includes an information storage component.[48]

The inclusion of two-way messaging in the Commission's list of "surchargeable" revenue is not surprising. In 1996, at the same time the Commission was adopting the funding mechanism for the PPPs in D.96-10-066, the legislature had just recently adopted Pub. Util. Code Section 234, which effectively exempted one-way paging from Commission oversight. Indeed, D.96-10-066 clearly recognized that revenues from one-way paging would not be subject to surcharge. However, at that time, paging played a significant and robust role in the telecommunications market. Thus, the Commission understandably wanted to maintain its jurisdiction over, and the ability to collect surcharges on, the remaining two-way messaging portion of the industry. There is no basis, however, to conflate two-way messaging with text

[48] *See supra* Section II.B.1.

messaging, which gained market prominence later and includes more advanced storage and information processing features.

Moreover, the distinction between text messaging and two-way messaging has long been recognized by the FCC. The FCC included "two-way messaging" as part of the "paging" market in its annual CMRS Competition Reports until it stopped analyzing paging as a market segment in the early 2000s.[49] More recent CMRS Competition Reports nonetheless continue to group together "two-way messaging" and "paging"—along with "M2M and other telemetry communications"—into their own "specialized market segment of the mobile wireless industry" that particularly serves discrete customer segments, including hospitals, healthcare providers, police departments, fire departments, and emergency responders, who prioritize its reliability and affordability.[50] On the other hand, since they made their CMRS Competition Report debut in 1999, text message services have never been analyzed by the FCC as part of the same market as paging or two-way messaging.

Thus, "two-way messaging" and "text messaging" have always been identified as two very different services, provided by different types of carriers to different types of customers, using different radio frequencies and technology platforms, and sometimes in competition with one another. As noted above, text messaging has all of the fundamental legal and technical

---

[49] Annual Report and Analysis of Competitive Market Conditions With Respect to Commercial Mobile Services, *In the Matter of Implementation of Section 6002(b) of the Omnibus Budget Reconciliation Act of 1993*, 16 FCC Rcd 13350 (July 17, 2001), available at https://apps.fcc.gov/edocs_public/attachmatch/FCC-01-192A1.pdf.

[50] "Because paging networks rely on satellite transmission and have built-in redundancy due to simulcasting from all the transmitters in a given zone, paging is much less vulnerable to service outages than most other communications technologies. Moreover, paging transmitters emit more powerful signals than mobile voice transmitters, offering greater range and in-building penetration than wireless services." *Universal Service Contribution Methodology A National Broadband Plan for Our Future*, Comments of USA Mobility, FCC, WC Docket No. 06-122, at 3 (June 11, 2001), https://ecfsapi.fcc.gov/file/7021984748.pdf.

characteristics of an information service: sending and retrieving text messages involves storing, processing, transforming, and retrieving information, while two-way messaging has none. Therefore text messaging is distinct from, and cannot be conflated with, two-way messaging, and is an information service not subject to PPP surcharges and user fees.

III. EVEN IF TEXT MESSAGING WERE A TELECOMMUNICATIONS SERVICE, SUBJECTING TEXT MESSAGING TO PPP SURCHARGES AND USER FEES WOULD VIOLATE CALIFORNIA LAW BECAUSE IT WOULD CAUSE INEQUITY, DISCRIMINATION, AND COMPETITIVE HARM.

Even if text messaging were a "telecommunications" service, and even if there were an accepted methodology for wireless carriers to determine the portion of text messaging revenues that are "intrastate," California law would still prohibit the Commission from assessing PPP surcharges and user fees on text messaging revenues.

Section 871.5(d) of the California Public Utility Code provides that surcharges must be assessed "in a way that is equitable, nondiscriminatory, and without competitive consequences."[51] Thus, the statute requires that any surcharge be competitively neutral, treat like services alike, and create no artificial advantages for any provider over its rivals.[52] Carrier text messaging is but a small part of a much larger messaging marketplace. Imposing PPP surcharges on just one segment of the messaging market (text messaging) while leaving other dominant competitors in the market unassessed would be inequitable, discriminatory, and would have

---

[51] Cal. Pub. Util. Code § 871.5(d).

[52] The Commission has recognized that, to impose differing contribution obligations on different entities, it must analyze whether they are similarly situated and whether a rational basis exists for the distinction. *See, e.g., Order Instituting Rulemaking Regarding Revisions to the California Universal Telephone Service (LifeLine) Program*, D.14-09-104 at 3-4. The Commission has disallowed program funding structures that violate this requirement. *See, e.g., Order Instituting Rulemaking on the Commission's Own Motion to Consider Modifications to the Universal Lifeline Telephone Service Program and General Order 153,* D.03-01-035 at 21.

negative competitive consequences. Such surcharges are therefore prohibited under Section 871.5(d).

Subjecting carrier-provisioned text messaging to PPP surcharge and user fee obligations would distort the market for mobile messaging services. The success of carrier-provisioned text messaging services in the marketplace has spurred non-carrier messaging providers such as Apple and Google to develop competing messaging services. Traditional text messaging services have already yielded significant market share to over-the-top ("OTT") applications and IM chat services that include the same functionality as text messaging. There are now a growing number of ways to send the functional equivalent of a text message using a mobile data connection, such as Facebook Messenger, WhatsApp, and Snapchat. In 2014, OTT texting apps surpassed traditional text messaging in terms of volume for the first time.[53] 29% of all smartphone owners use general-messaging apps (such as WhatsApp or Kik), 24% use auto-deleting messaging apps (such as Snapchat or Wickr), and 5% use anonymous messaging apps (such as YikYak or Whisper). These apps are especially popular among smartphone owners age 18-29 (42%/56%/10% use the three categories of messaging app described).[54] Facebook Messenger currently has over 100 million active users, with Google Hangouts, Snapchat, and WhatsApp combining for another 100 million active users.[55]

---

[53] *Facilitating the Deployment of Text-to-911 and Other Next Generation 911 Applications*, Policy Statement and Second Further Notice of Proposed Rulemaking, 29 FCC Rcd 1547, 1550 ¶ 6 (2014) ("911 Policy Statement & Second FNPRM") ("In mid-2013, the six most popular mobile chat applications averaged nearly 19 billion messages each day, compared to 17.6 billion SMS messages.").

[54] *See* Pew Research Center, *Social Media Update 2016* (November 11, 2016), http://www.pewinternet.org/2016/11/11/social-media-update-2016/.

[55] *See* Statista, *Most popular mobile messaging apps in the United States as of May 2017, by monthly active users (in millions)* (May 2017), https://www.statista.com/statistics/350461/mobile-messenger-app-usage-usa/.

The FCC and California have in the past followed the principle that universal service obligations should not fall differently on providers that compete with each other. In its 2006 decision to impose USF contribution obligations on interconnected VoIP providers, the FCC relied in part on how interconnected VoIP services were increasingly competing with traditional telephone service, and found that requiring interconnected VoIP providers to contribute "reduces the possibility that carriers with universal service obligations will compete directly with providers without such obligations."[56] When the California Legislature directed the Commission to require interconnected VoIP providers to collect surcharges, the Senate's analysis of the bill specifically noted the FCC's conclusion and observed that "[c]ustomers now increasingly are getting voice telephone service through interconnected VoIP service."[57]

Imposing PPP surcharges and user fees on text messaging services would exclusively disadvantage consumers of carrier-provisioned text messaging and have "competitive consequences" vis-à-vis unregulated OTT services.[58] Consumers of text messaging should not be treated differently than consumers of the functionally equivalent OTT messaging services. To do otherwise would distort the competitive marketplace in California and impose discriminatory surcharges on wireless consumers in manner that would be inconsistent with Section 871.5(d) of the California Public Utility Code.

---

[56] *Universal Service Contribution Methodology*, Report and Order and Notice of Proposed Rulemaking, 21 FCC Rcd 7518, 7541 ¶ 44 (2006).
[57] A.B. 841 (2011), Bill Analysis, Senate Rules Committee, available at http://www.leginfo.ca.gov/pub/11-12/bill/asm/ab_0801-0850/ab_841_cfa_20110712_174315_sen_floor.html
[58] *Id.*

IV. A COMMISSION DETERMINATION THAT TEXT MESSAGING IS NOT SUBJECT TO SURCHARGE WILL NOT JEOPARDIZE THE FUNDING OF THE PPPS.

CTIA and its members support, and have long supported, the Commission's efforts to advance universal service through the California LifeLine program, the Deaf and Disabled Fund, and other PPPs designed to advance universal service in a technology-neutral manner and improve the lives of Californians. A Commission determination that confirms that text messaging is not a telecommunications service and thus not subject to surcharges, will not affect this support because it will have no impact on the funding of the PPPs.

The Commission always sets (and adjusts where necessary) the surcharge rate to fully fund the PPP budgets. This is done in three steps. First, the Commission determines the budget necessary to fund the anticipated participation in each program.[59] Second, the Commission determines the billing base against which the surcharges will be applied by calculating the total intrastate telecommunications revenues forecasted by telephone corporations and interconnected VoIP service providers in California for the upcoming year.[60] Finally, after determining the billing base, the Commission then calculates the percentage surcharge necessary (as applied against the representative billing base) in order to collect the amount budgeted for each of the PPPs.[61] As noted above, the relevant carrier revenue base that the Commission has used to set the surcharge amount does not – and has not – included text messaging revenue.[62] As a result, recognizing that text messaging is not subject to PPP surcharges and user fees will maintain the

---

[59] *See, e.g.,* Resolution T-17454. Approval of Fiscal Year 2015-2016 California LifeLine Program Budget in Compliance with Public Utilities Code Section 273(a).

[60] Resolution T-17519. Approval of the California LifeLine Program Surcharge Rate of 4.75%, Effective November 1, 2016, p. 9.

[61] *Id.*

[62] *See supra* Section I (noting that, at minimum, Verizon, AT&T, T-Mobile, and Sprint have consistently treated text messaging as an information service).

status quo and will not affect the funding of any of the included programs , the current and future surcharge rates, or the methodology for establishing those rates.

V. OBJECTION TO SCOPE OF PROCEEDING

Per Rule 6.2, CTIA objects to the OIR's inclusion of "whether text messages are an economic substitute for voice messages"[63] within the scope of this proceeding. The legal standard for determining whether a service is subject to PPP surcharges and user fees is whether it is an "intrastate telecommunications service." Whether "text messages are an economic substitute for voice messages" is entirely irrelevant to the proper regulatory classification of text messaging as an information service or a telecommunications service. Therefore, such consideration is not properly within the scope of this proceeding.

VI. CONCLUSION

As the Commission has acknowledged, its authority to assess PPP surcharges and user fees on text messaging turns on the question of whether it is a telecommunications service or an information service as defined in the Act, two classifications which the Commission agrees are mutually exclusive. As discussed above, text messaging has all the characteristics of an information service, not a telecommunications service and thus should not be subject to surcharges. This conclusion also will avoid the need for burdensome and lengthy additional proceedings to determine how text messaging revenues would be allocated to the intrastate jurisdiction, and will prevent distortion of the messaging market in contravention of Section 871.5(d) of the Public Utilities Code. Such a finding will also have no impact on the funding of the PPPs.

---

[63] *See supra* Section II.A.; Order at 6.

Therefore, CTIA requests that the Commission adopt a rule to clarify that text messaging is an information service that is not subject to PPP surcharges and user fees.

Respectfully submitted August 18, 2017 at San Francisco, California.

GOODIN, MACBRIDE,
SQUERI & DAY, LLP
Jeanne B. Armstrong
505 Sansome Street, Suite 900
San Francisco, California 94111
Telephone: (415) 392-7900
Facsimile: (415) 398-4321
Email: jarmstrong@goodinmacbride.com

By *\/s\/ Jeanne B. Armstrong*
Jeanne B. Armstrong

Attorneys for CTIA®

3100/005/X193294.v1

EXHIBIT A

DECLARATION OF DR. HANY FAHMY

August 16, 2017

TABLE OF CONTENTS

I, Dr. Hany Fhamy**,** declare:

I. Qualifications and Background

1. I am Assistant Vice President of Global Public Policy and Legislative Affairs with AT&T Services Inc. I have worked at AT&T for 19 years. My responsibilities include leading wireless and wireline broadband performance evaluation for the purpose of disclosures to federal and state governments and guiding AT&T compliance and participation in government sponsored broadband evaluation initiatives such as the Federal Communications Commission's ("FCC") wireline/mobile Measuring Broadband America ("MBA"), Connect America Fund, and the State of California mobile drive test programs. Prior to this position, I was Director of wireless and wireline access architecture with AT&T Labs responsible for the evolution of AT&T's access network to new technologies such as 5G, FTTP (fiber to the premises) and G.FAST (high speed DSL). Prior to joining AT&T, I was Research Staff Member with Racal DataComm USA. I hold a Ph.D. in Electric and Computer Engineering from University of Miami, Florida. I make this declaration based on personal knowledge. If called as a witness, I could and would testify competently to the facts stated herein.

II. Purpose and Summary

2. The objective of this declaration is to demonstrate to the "California Public Utilities Commission ("CPUC") that text messaging is an information service, not a telecommunications service, and to recommend the continuation of positioning this vital capability as it has always been at both the federal and state level. Text messaging, which is essentially a mobile version of e-mail, enables the sending and receiving of text messages and multimedia material to or from mobile phones, or to email or instant messaging account. Text

messaging also can be used to send pictures, videos and ring tones, and to access databases, pay for services, web searches, interact with Real Time Text ("RTT") clients, etc.

3. As discussed below, because text messaging involves "storing," "processing," "retrieving," or "making available" content between users, in addition to interworking between different carriers, technologies, formats, message sizes and protocols, it is an "information service."

III. Introduction to Text Messaging

4. According to Wikipedia, text messaging, or texting, is the act of composing and sending electronic messages, typically consisting of alphabetic and numeric characters, between two or more users of mobile phones, fixed devices (*e.g.*, desktop computers) or portable devices (*e.g.*, tablet computers or smartphones).

5. The term originally referred to messages sent using the Short Message Service ("SMS"). Lately, it has grown beyond alphanumeric text to include multimedia messages containing digital images, videos, and sound content, etc.

6. SMS messages can be composed of a maximum of 140 bytes (1120 bits) of data that will be transmitted through a network. They are coded on 7, 8 or 16 bits, resulting in 160 characters that a subscriber can write.

7. On the other hand, Multimedia Messaging Service (MMS) is a standard way to send messages that include multimedia. Unlike text-only SMS, MMS can deliver a variety of media, including up to forty seconds of video, one image, a slideshow of multiple images, or audio.

8. Text Messages (Both SMS and MMS) is a *Store and Forward* service, meaning

that instead of being transmitted directly to the destination, messages are first sent to an entity called *Service Center* (SC) and then forwarded to the recipient. This is a very important characteristic, because if the recipient is not connected, the message is saved in the SC and the network keeps in mind that there is a pending text message – when the receiver becomes available, the network will contact the SC and the latter will forward the text message.

9. Another important feature is the possibility of *confirmation* of delivery of text messages. The sender can choose to be informed when the message delivery is complete, namely when the corresponding user has correctly received the message.

10. For the test of this document the "Text Messages" term is used to represent both SMS and MMS technologies unless specifically stated.

IV. Types of Text Messages and Use Cases

11. Text Messages can be classified into five categories:

- *Person to person* (P2P): the message is sent between two subscribers.
  - o Chatting: using a chat channel, similar to the internet groups.
- *Application/Advertiser to person* (A2P): used for the purpose of advertising, it implies massive transmission of a "bulk text messages" to a given list of numbers.
- *Person to Network* (P2N) or *Person to Application* (P2A): used when the subscribers send a text Messages in order to access different kind of services like weather information, ringtone/picture download, tele-voting.
  - o Mobile Banking: allows subscribers to check their account balance.
  - o Electronic Commerce: allows making payments and transferring money.
- *Internet to Person* (I2P): sending an text Message from a web-page accepted by the operator.
  - o Alerting subscribers that they have received a voice message, fax or email.
  - o Corporate Email: similar to the email notifications, but this service uses the corporation's infrastructure, forwarding all received emails of the employees to their phones.
  - o Information services: subscribers can subscribe to these services and receive messages regarding sport scores, flight information, news headlines, jokes etc.

- *Machine to Machine* (M2M): a device that captures information and sends it to another device or a server. Used in navigation, traffic information, road tolling, industrial alarms and controls, monitoring vital signs etc.
  - Remote Monitoring: subscribers can choose to be informed via text messages when a certain event occurs. Examples include notifying when a vending machine is empty or meter reading.

V. New Usage of Text Messages

12. Besides the basic use cases previously presented, there are many other interesting scenarios for using text messages:

Commercial Applications
Media companies have utilized MMS on a commercial basis as a method of delivering news and entertainment content, and retailers have deployed it as a tool for delivering coupon, product info, images, videos, and other material.

Early Flood Alerts Using Short Message Service
This scenario presents a solution for informing the public of a forthcoming flood, in order to minimize the accident risk and the financial loss. The system is configurable via a text message – the clients that will be warned and the level of the water can be specified. This system uses a solar cell to obtain power, an ultrasonic sensor to measure the level of the water and a microcontroller to process this data and send it to a GSM modem via SMS. The modem can then forward the SMS to the subscribed clients.

An Efficient Text Message-Based Framework for Public Health Surveillance
Another usage of the short message service is in the domain of Public Health Surveillance. The text message infrastructure can be efficiently used in order to collect on demand health data from a target population. This information is then analyzed and the interpretation can be used in order to anticipate disease outbreaks and implement health policy programs. The usage of text message has the advantage that GSM network is widely developed, in rural as well as urban areas. This method is faster and more ecological than the ancient one which implies filling in papers.

Intelligent Fish Disease Diagnostic System Based on Text Message Platform
This scenario was developed for fish farmers who wish to obtain in a simple and cheap way a diagnosis from an intelligent-diagnosis-system. This was thought of for two reasons: firstly the diseases in fish have an increased occurrence during the last years, and secondly the solution found had to be affordable (in the situation where an expert is not always available) and had to reach places without access to the Internet. The intelligent diagnosis system is built using a probabilistic graphical model (Bayesian networks). The farmer sends a text message with the symptoms, the system extracts and analyzes and answers with a diagnosis and treatment.

A Novel Vehicular System (VSS) Approach for Intelligent Transport System (ITS)
This scenario seeks a possible solution to diminish the traffic congestion and the number of traffic accidents. For this purpose, the Intelligent Transport System sends safety information to the highway users via the short message service. Instead of deploying a new *Vehicular Ad hoc Network* to support the traffic data transmission, the Mobile network can be used more cost effectively.

Real-time Remote Monitoring and Warning System in General Agriculture Environment
This scenario proposes a low-cost real-time remote environmental monitoring system based on short messages. This solution consists of a wireless environment monitoring equipment ("WEME"), using solar power, mobile phones for parameters management and some configuration settings. Depending on the needs, several sensors can be installed and connected to the WEME. When the parameters exceed their threshold range, the system will send a real time warning message to mobile phones. On small-scale agriculture, this system represents a viable solution for the monitoring and warning over the environments' status.

13. For simplicity, in the next few sections of the document we will focus on the SMS architecture for detailed technology description.

VI. SMS in GSM/UMTS High Level Architecture

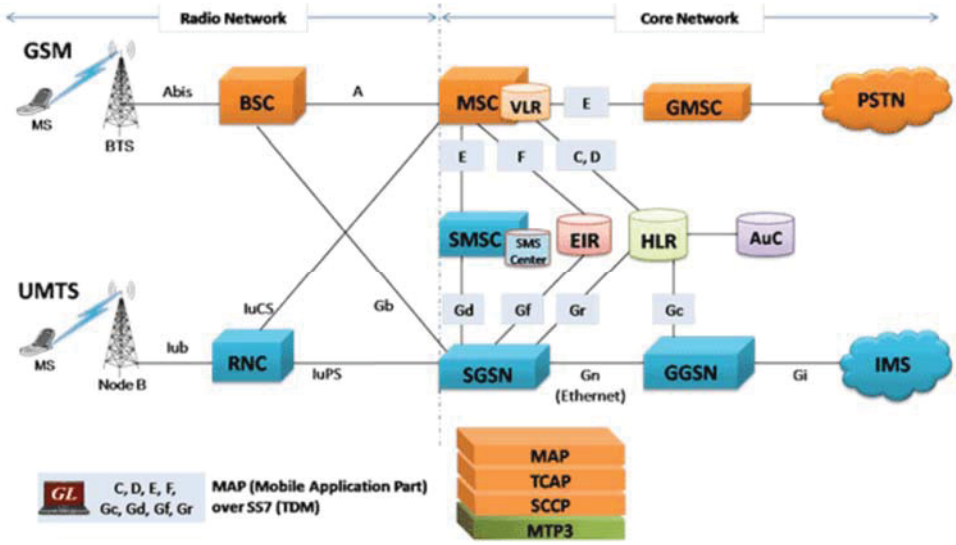

Figure 1. SMS Architecture

14. For the transmission of SMSs, a special server called *SMS Center or Service Center* ("SMSC" or "SC") has to be implemented. The SC is in charge of the *Store and Forward* function.

15. The device that is responsible for sending or receiving SMSs is the SME – Short Message Entity.

16. The SC is allocated an E.164 number in the Public Land Mobile Network ("PLMN") numbering plan. The communication between the SC and the mobile terminal takes place through the MSC (Mobile Switching Center). The MSC is in charge of switching functions for all the calls in a certain geographical area.

17. The *SMS Gateway MSC* ("SMS-GMSC") is responsible for forwarding the SMS to the destination Visiting MSC ("VMSC"). It will also inform the Home Location Register ("HLR") of the delivery status of the message.

18. In order to reach the SC, the PLMN has to send the message from the VMSC to the MSC where the SC is situated. The latter one is called *SMS-Interworking MSC* ("SMSIWMSC"). It can receive the message from the PLMN and send it to the recipient SC.

Protocol Stack

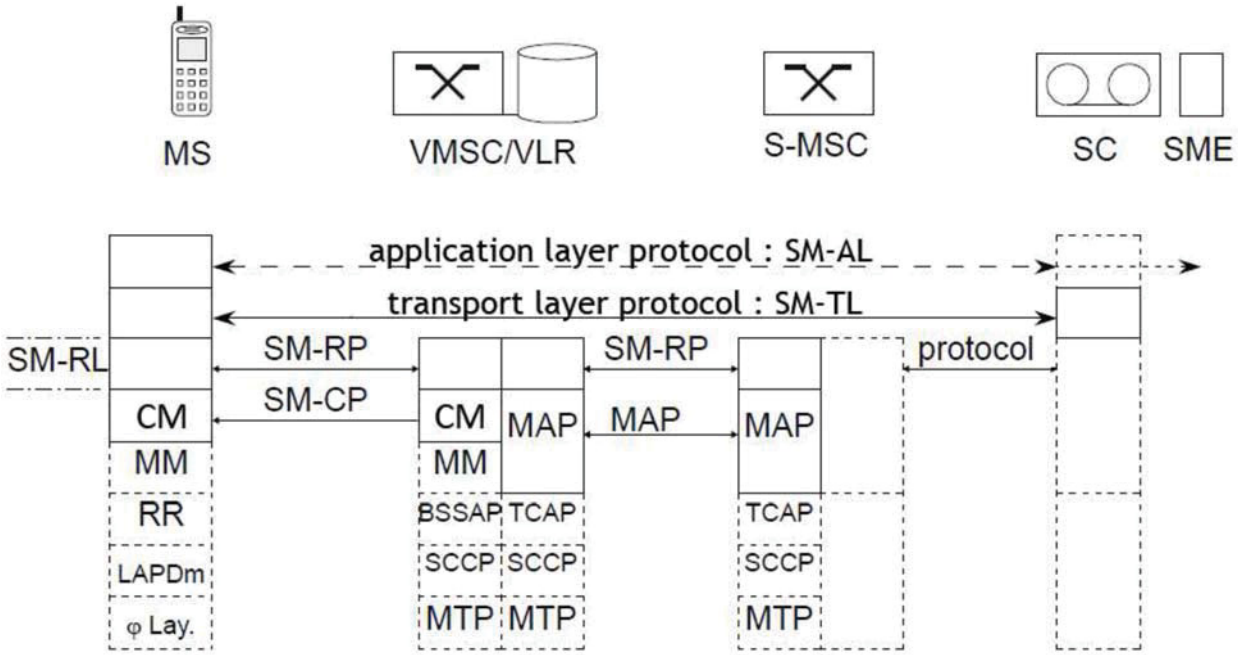

Figure 2. Protocol implemented for SMS

19. The protocol layers used in order to transmit an SMS can be seen in Figure 2. The layers used during calls (Mobility Management *MM*, Radio Resource *RR*, Link Access Protocol on the *Dm* channel *LAPDm*, and Physical Layer) are also represented. The Connection Management CM layer includes a specific sublayer for the SMS.

20. There are 4 layers involved in the transmission of SMS:

- The *Short Message Application Layer* ("SM-AL"): is present in the mobile terminal and the Short Message Entity ("SME"). Its purpose is to generate and interpret messages.

- The *Short Message Transfer Layer* ("SM-TL"): offers the SM-AL a reliable service in order to transfer and receive short message between MS and SC. It performs the coding, and adds a timestamp of when the message was received by the server.

- *Short Message Relay Layer* ("SM-RL"): allows the transfer of messages through different equipment using Store and Forward.

- *Connection Management* ("CM"): The Short Message Control Protocol ("SM-CP") works between the MS and the VMSC/VLR. It transmits the SM, and protects

against loss caused by changing the dedicated channel (this is needed because when changing the dedicated channel.

SMS Segmentation and Concatenation

21. As shown in Figure 3, texts larger than 160 characters are segmented by the network. The receiver then needs to concatenate the pieces. For concatenation to be possible, a header is added to the Protocol Data Unit ("PDU") of the SMS – this header is called User Data Header ("UDH").

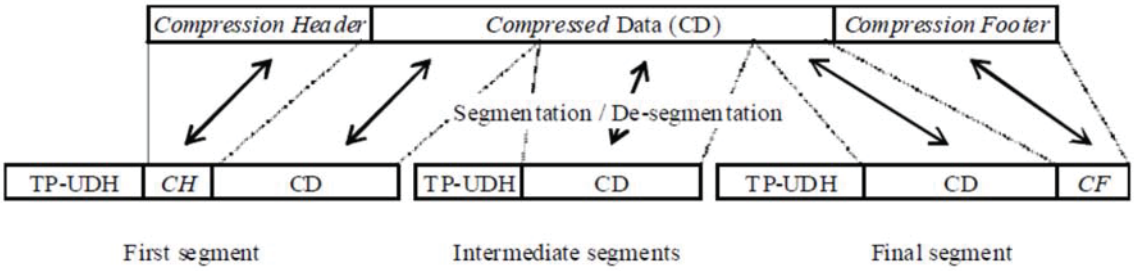

Figure 3. Concatenation of a compressed short message

SMS Transmission

22. Figure 4 shows the call flow used for the transmission of an SMS by a MS. The message sent by the subscriber is coded by the transport entity of the mobile in 140 bytes also adding the address of the recipient, resulting in a *Transfer Layer* PDU ("TL-PDU"). At the *Relay Layer*, the address of the SC is added to the TL PDU. The new packet is called *Relay Protocol-DATA* ("RP-DATA"). This packet is encapsulated in a *Control Protocol* (CP) level PDU, but at this stage no important information is added. This packet is called PDU *CPDATA* and it is transported towards the VMSC/VLR due to *SM-CP* and its lower layers.

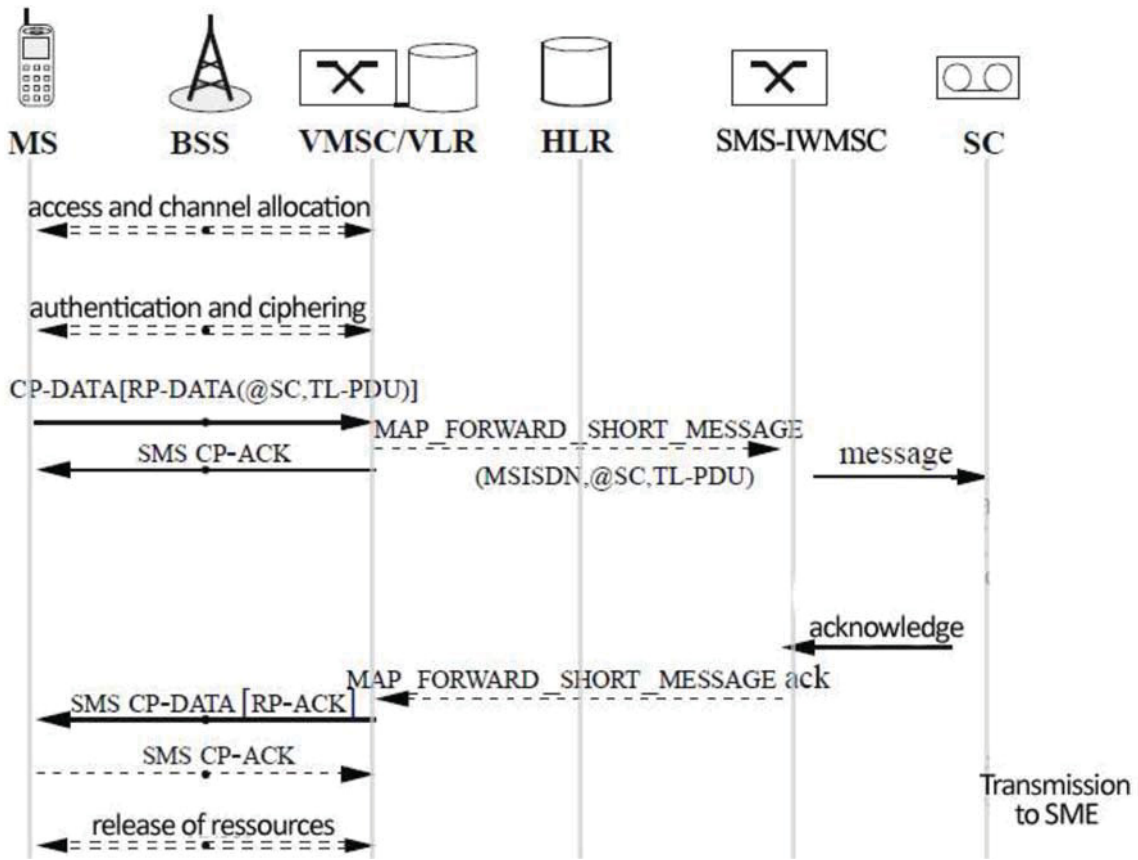

Figure 4. Sent message by the MS

23. As seen in the Figure 5, the VMSC/VLR decapsulates the PDU *CP-DATA* in order to find the SC number and then replaces in a MAP_FORWARD_SHORT_MESSAGE the TL PDU, the number of the SC and the number of the mobile. The MAP message is acknowledged by the SMS-IWMSC which will forward the message to the SC.

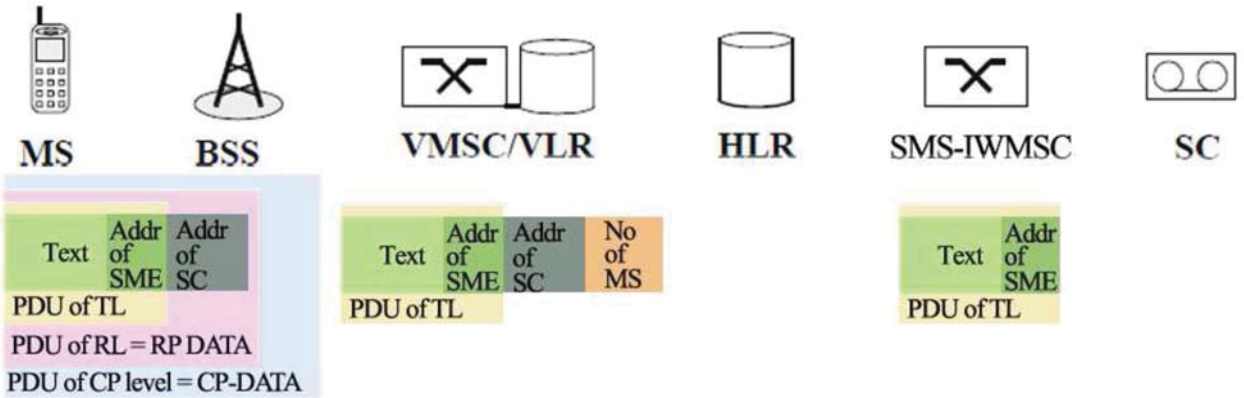

Figure 5. The evolution of the PDU

24. If the SC correctly stores the message, then a positive acknowledgement is sent to the VMSC/VLR (*i.e.*, message MAP_FORWARD_SHORT_MESSAGE ack) and then a RP-ACK is sent to the mobile which is equivalent to a positive SMS-SUBMIT-REPORT. If there is a problem in the transmission chain, a negative SMS-SUBMIT-REPORT is generated.

25. The SC stores the message and the addresses, and sends back to the SMS-IWMSC an acknowledgement message. The SMS-IWMSC can acknowledge now the packet received from the VMCS/VLR (through the TCAP operation *Return Result*). The VMSC/VLR will format the acknowledgement message PDU *RP-ACK* which is encapsulated into a PDU *CPDATA* and sent to the mobile station. In the end, this PDU is acknowledged by the MS.

26. If possible, the SC will send the SMS to the SME. If the SME is not available in the network, the SC will store the message until it can be sent. However, after a certain period, if the SMS can't be sent it is deleted from its memory. This period can be specified by the MS at the transport layer.

27. In conclusion, the MS only has the confirmation that the message sent arrived at the SC. After receiving the SMS, the SME can send back a new message in order to confirm the correct reception; this last exchange of messages is treated differently than the first confirmation.

28. As shown in Figure 6, when the receiver becomes available in the network, the VLR announces the HLR using a *MAP_READY_FOR_SM* message. The HLR sends a *MAP_ALERT_SERVICE_CENTRE* message to the SMS-IWMSC, which will in turn alert the SC. The SC then proceeds to transmit the short message.

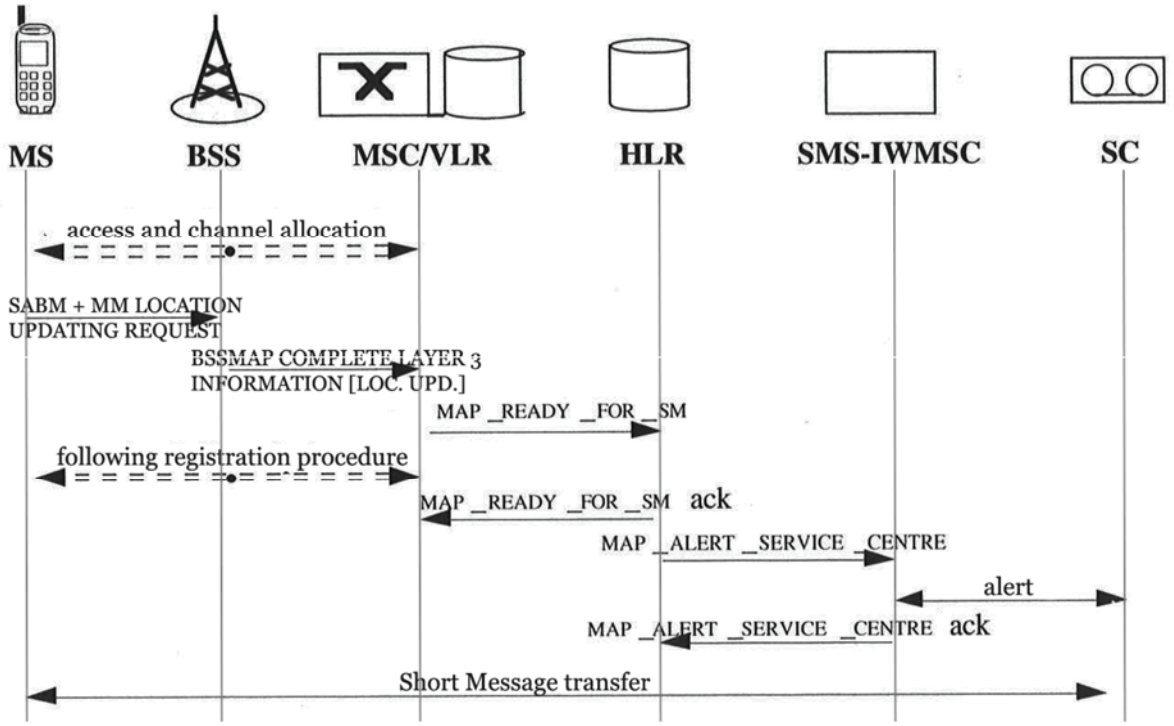

Figure 6. SMS alert when receiver is available

VII. SMS in Long Term Evolution (LTE)

29. LTE is a 4th Generation ("4G") standard for wireless communication which provides seamless IP connectivity, developed by the 3rd Generation Partnership Project ("3GPP"). It offers an increased capacity and multiservice air interface. Unlike previous cellular systems, LTE is all packet-switched ("PS") technology.

30. Figure 7 shows the general architecture of the LTE network including the radio interfaces, the radio access network and the core network that is in some cases referred to as Evolved Packet Core ("EPC").

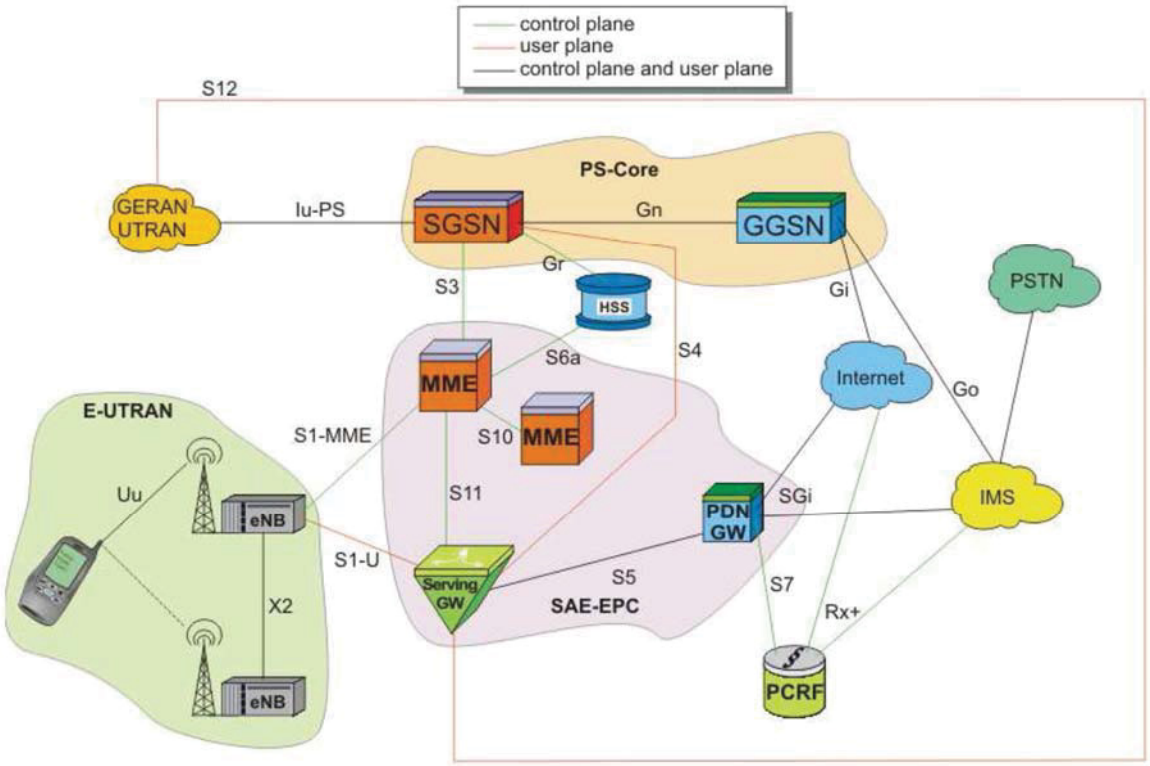

Figure 7. LTE Architecture

31. Since LTE is a Packet Switched network, in order to enable using VoIP for voice services and the interworking with legacy Circuit Switched ("CS") network, the EPC needs to connect to another platform called the IP Multimedia Subsystem ("IMS").

Message Service in IMS

32. IMS allows sending of messages of 200 bytes with acknowledgement. The messages are sent between users in real-time. The service provides a fast enough exchange of messages for an interactive conversation to take place.

Message Types

33. In IMS there are two types of messages: page-mode messages and session-mode messages.

Page-Mode Message
A page-mode message is very similar to an SMS. It is a SIP MESSAGE, it is not related to previously sent messages and requires no answer. It can be a text sent between two subscribers, or a notification. The User Agent Client (UAC) sends the SIP MESSAGE to the proxy, and the proxy forwards it to the User Agent Server (UAS), which responds with a 200 OK message.

Session-Mode Message
For a conversation between two or more subscribers, a session-mode is used. In this mode, a SIP INVITE is used to establish a session in order to transmit instant messages (not video or audio content)

VIII. Interconnection between Legacy GSM/UMTS Domain and an LTE/IMS-Based Network

34. The interconnection between the legacy domain (*i.e.,* GSM or UMTS) based on MAP (Mobile Application Protocol) and the LTE-EPC based on IMS is enabled using a gateway called IPS-SM-GW, IP-Short Message-Gateway

Interfaces of IP-SM-GW

35. As seen in Figure 8, the IP-SM-GW is placed between the IMS core and the legacy domain. It provides users of GSM/UMTS and LTE the ability to send/receive/exchanges SMSs. Note that the IP-SM-GW is connected to the HLR-HSS and is able to communicate with both with MAP and IMS.

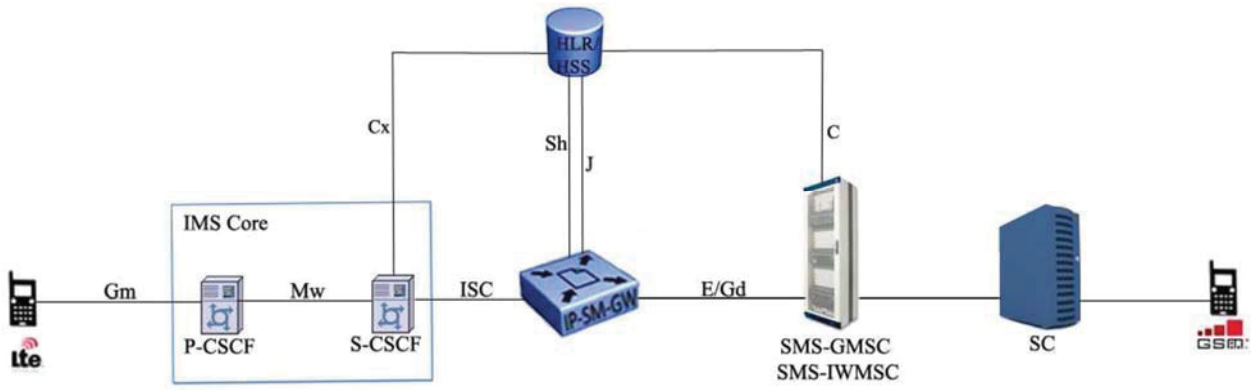

Figure 8. IP-SM-GW architecture

Functionalities of the IP-SM-GW

36. The general functionalities of the IP-SM-GW are:

- Realizes to which domain a certain short message has to be delivered: CS, PS or IMS;
- Renders the transition to the legacy domain seamless
  - the SMS-GMSC sees it as if it were MSC or SGSN, connecting to it via MAP;
  - the SMS-IW-MSC sees it as if it were MSC or SGSN, connecting to it via MAP;
- Responds with its own address to the Routing Information for Short Message requests received from the HSS;
- When sending a message to the legacy domain, it must connect via MAP to the HSS to find the address of the MSC/SGSN concerned;
- Keep a data basis of the correlation between the MSISDN/IMSI and the address of the associated S-CSCF;
- In case of a Short Message sent from IMS towards legacy domain, it must check that the sender and receiver addresses are correct in the SIP headers;
- For messages sent from legacy domain towards IP based domain, it must translate the MSISDN/IMSI to TEL URI (when available), or to SIP URI;
- Act as an Application Server for the IMS core to read from the HSS and interpret the availability flags for receiving SMSs.

IX. SMS Interworking between Carriers

37. There are several different options available to interconnect SMS services between various carriers to enable the interoperability. Three interconnection scenarios have been identified:

1) every carrier independently selects an ICV (Inter-Carrier Vendor) to act as its message transfer point;
2) all carriers select a single ICV or industry association to provide interoperability;
3) carriers interconnect their networks directly based on bilateral agreements.

38. These scenarios are not mutually exclusive. Figure 9 shows four different carriers each with a device and a messaging service center (SMSC – Short Message Service Center) as

well as three independent ICVs acting as message transfer gateways. The A interfaces describe the connection and feature-set between a carrier and an ICV. Interfaces B describe the connection and feature-set between two ICVs. Since each carrier can have a different feature set between their network and the ICV, they are indexed with different numbers (A1, A2, A3 and A4).

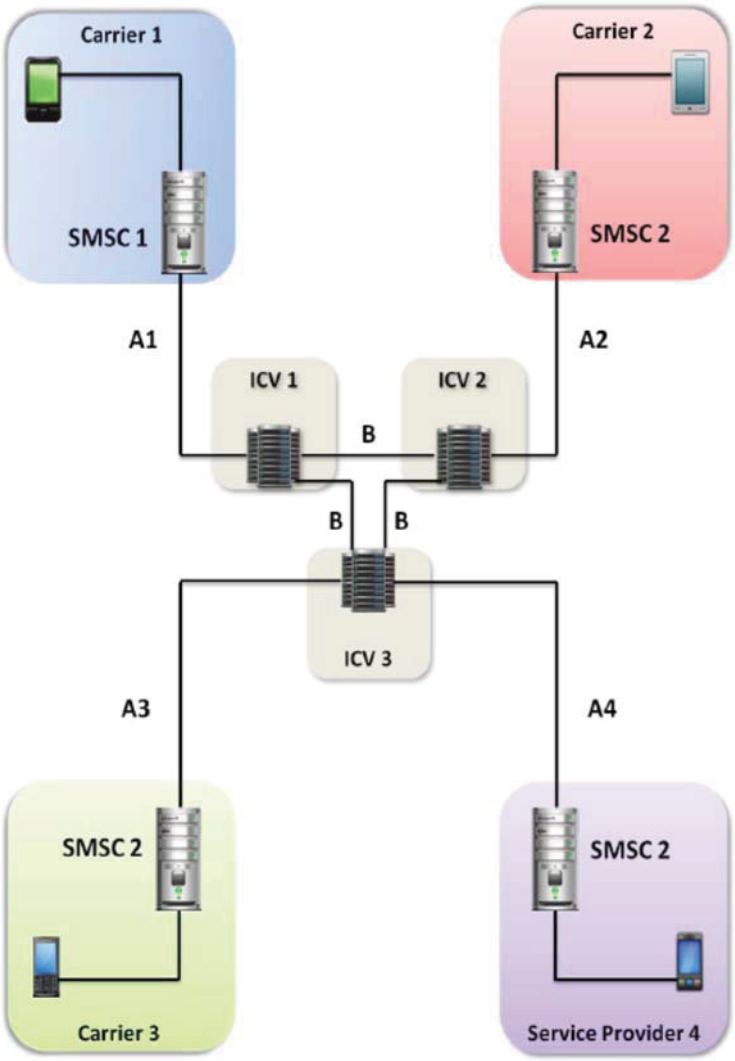

Figure 9. Carrier Interconnection for SMS Interoperability

Interconnection Feature Sets

39. In general, there are two different approaches to define feature set for the inter-carrier messaging service:

a) Define the lowest common denominator among all carriers and service providers;

b) Define the feature set for each carrier and service provider and messaging limits based on the Originating and Terminating carrier and service provider relationship (A1 to A2, A2 to A3 and A1 to A3)

Interconnection Protocols

40. There are various protocol types used in the industry for messaging application and for interfacing between different messaging entities. Most commonly used are:

- SMPP
http://www.smsforum.net

- EMI/UCP
http://madism.org/~madcoder/tmp/EMI-UCP4.6.pdf

- SMS2000/OIS
http://www.kannel.org/download/1.4.0/userguide-1.4.0/userguide.html

- SNPP
http://www.faqs.org/rfcs/rfc1861.html

41. Depending on the service providers' network infrastructure and technology a certain protocol might be preferred.

42. Today most carriers agreed for SMPP to be preferred protocol for the inter-carrier messaging service. SMPP version 3.4 should be supported as a minimum recommendation. Future versions of SMPP are allowed as long as they are backwards compatible to SMPP version 3.4.

X. Conclusions

43. As clearly demonstrated above, text messaging heavily involves "storing," "processing," "retrieving," or "making available" content between users, in addition to interworking between different carriers, technologies, formats, message sizes and protocols.

44. Text messaging is a store-and-forward service that retains messages regardless of the destination being available to receive the message or not. The store-and-forward function is performed by the carrier Service Center (SC). Text messages can be stored by the SC for hours, days or even weeks. During this time, the SC will continue to try to deliver the message to the destination. Such capabilities make the text messaging function an analogy of email on desktop systems.

45. Text messaging also involves significant "processing" and "transforming" of information. Above we demonstrated segmentation, concatenation, protocol conversion between different technologies/protocols/formats and interworking between different carriers. This is consistent with information service definition, "offer[s] … a capability for …transforming [and] processing" messages, which "change[s]" the messages' "form or content.". In addition, text messaging is interconnected to many other information sources such as email, over-the-top applications and desktop instant messaging systems. This require significant protocol conversion and processing capabilities. For example, conversion between text messaging and emails requires SMTP to SMPP protocol conversion. These two protocols have vastly different formats and fields, SMPP has wireless network info while email contains email addresses and subject fields. Gateways are required between these technologies to convert and interwork messages.

46. Also, as described in section V, text messaging enables many other applications and allow users to query electronic databases and retrieve data. To the end user, this functionality

offers the capability for acquiring or "retrieving" information in text message form; to the content provider, it offers the capability for "making available" information.

XI. References

- SMS over LTE: services, architecture and protocols Diana-Minodora Ciuraru, Lavinia Hilohi, Antoine Mercier, Xavier Lagrange
- CTIA SMS Interoperability Guidelines
- CTIA Petition to adopt, amend, or repeal a regulation pursuant to Pub. Util. Code § 1708.5

I declare under penalty of perjury under the laws of the State of California that the foregoing is true and correct to the best of my knowledge, information and belief.

Executed this 16th day of August 2017 at Atlanta, Georgia.

/s/
Dr. Hany Fahmy

711250

BEFORE THE PUBLIC UTILITIES COMMISSION
OF THE STATE OF CALIFORNIA

Order Instituting Rulemaking to Consider Whether Text Messaging Services Are Subject to Public Purpose Program Surcharges.	Rulemaking 17-06-023 (Filed June 29, 2017)

DECLARATION
of
JIANCHONG YANG

On Behalf of

CTIA

August 15, 2017

I. INTRODUCTION

A. QUALIFICATION OF WITNESS

1. My name is Jianchong Yang. I am a Senior Manager, Systems Design and Strategy for T-Mobile US ("T-Mobile"). My business address is 3655 131st Ave SE, Bellevue, WA 98006.

2. I obtained a Bachelor of Science degree from the East China Normal University – Shanghai China. I subsequently earned a Master of Science degree in Physics from Southeastern Massachusetts University.

3. I started my professional career in 1994 as a Software Engineer at I-Tech Corporation – Edina, Minnesota. In 1996, I began working as Senior Software Engineer at Software Architects Inc. – Bothell, Washington. In 1998, I began working as Senior Software Engineer at Allied Telesyn – Bothell, Washington. In 2000, I began working as a Senior Software Engineer with AT&T Wireless/Cingular. In 2004, I was promoted to Principal Engineer, System Architect, Messaging. In 2007, I began working for T-Mobile as Principal Engineer and System Architect, Mobile Messaging, before being promoted to my current position in 2012.

4. In my current role at T-Mobile as Senior Manager, Systems Design and Strategy, I am responsible for managing and leading a group of 8 talented engineers in designing, developing and implementing state of art messaging solutions for the constant evolving T-Mobile's mobile messaging systems, infrastructures and services including SMS, MMS and

etc. Recently, I took on additional responsibility to manage voicemail platform and services and my team has grown to 13 individual contributors.

B. PURPOSE OF DECLARATION

5. The purpose of my Declaration is to describe what transpires when a short messaging service ("SMS"), commonly known as "text messaging," is sent from or delivered to a T-Mobile customer's wireless device.

II. SMS INVOLVES STORING, PROCESSING AND TRANSFORMATION OF MESSAGES

6. An SMS message destined for a T-Mobile end user is not sent directly from the sender's device to the recipient's device. Instead, the message is first received at a T-Mobile short message service center ("SMSC"), where the message is processed and stored temporarily.

7. Once stored, the SMSC attempts to send the message to the recipient's device. If delivery of the message to the recipient's device fails, for example if the device is turned off, the message is not lost. The SMSC attempts to send the stored message for up to 72 hours. In either instance, an SMS message does not provide a real-time service between the sender and the recipient.

8. For messages sent between two T-Mobile customers' wireless devices, the SMSC performs processing and transforming operations before delivering the message to the recipient's device. Similar processing and transforming operations are performed on messages generated by T-Mobile supported applications.

9. Examples of processing and transforming a message include originator and recipient address (a.k.a. phone number) formatting and normalization, SMS segmentation and concatenation, truncating or subdividing messages, SMS character encoding transformation, Anti-spam and anti-spoof checking, SMS blocking, or time zone adjustment. The SMSC may perform additional operations on the SMS as necessary.

10. Some messaging applications require Simple Network Paging Protocol ("SNPP"), Simple Mail Transfer Protocol ("SMTP"), Wireless Communication Transfer Protocol ("WCTP") and Telelocator Alphanumeric Protocol ("TAP") to Short Message Peer-to-Peer ("SMPP") transformation to send a message to or receive a message from the SMSC.

11. The SMSC may also transform a SMPP protocol to GSM Mobile Application Protocol ("GSM MAP") to deliver the message to the recipient's device (or vice versa).

12. For some messages the SMSC relies on another network element or component such as IMS-SMSC Gateway to transform a message from GSM MAP protocol to IMS SIP protocol for the message to be delivered to a recipient's device registered on an IP Multimedia Subsystem ("IMS") network, or, transform a message from IMS SIP protocol to GSM MAP protocol for SMSC to receive a message from a device registered on an IMS network.

13. For inter-carrier text inter-operability, the SMSC may perform necessary encoding transformation, address translation and normalization, and segmentation normalization. If an inter-carrier hub solution provider is used, the message goes through additional transcoding and transformation to achieve a format suitable for delivery to the destination carrier's SMSC.

III. SMS USES EXTEND WELL BEYOND SENDING SHORT MESSAGES BETWEEN WIRELESS DEVICES

14. Customers can use SMS to retrieve information from applications or databases. Examples include sending an SMS to short codes to receive information about flight information, stock alerts, receive grocery coupon codes, ask questions to a conference call, or register a vote on a designated poll.

15. Customers can also receive SMS with a URL link in the text where it can re-direct customers to a different application or a website for information.

16. SMS also enables the operation of other applications. Examples include: a voicemail indicator (or message waiting indicator "MWI") that is sent to the end user's device using SMS to notify the presence of a new voicemail; third parties such as banks that use SMS to send two-step authentication codes to a recipient's device; when a user sends a multimedia messaging service ("MMS") to a T-Mobile customer, the multimedia messaging service center "MMSC" sends a MMS notification to the recipient via SMSC and includes a link where to download the MMS is embedded in the SMS.

17. SMS is also used when a new customer joins T-Mobile and activates their existing handset. In that situation, a binary SMS is sent to the new customer's device to re-program the handset, enabling it to access T-Mobile's wireless network and services.

18. SMS is also used to enable, disable, and configure other types of wireless connected devices such as cars and other IOT devices.

IV. NOT ALL SMS MESSAGES SENT TO A T-MOBILE CUSTOMER DEVICE TRAVERSE THE T-MOBILE NETWORK

19. Many over-the-top ("OTT") applications installed on T-Mobile customer devices use data service to send and receive text messages. In this instance, the text message is transmitted as data rather than SMS to T-Mobile. The OTT text normally passes through and is processed by external application servers, e.g. iMessage or Google+, instead of a T-Mobile SMSC.

20. Because the T-Mobile SMSC would have no interaction with these types of texts, it would be impossible for T-Mobile to account for the number of messages sent by T-Mobile customers sending messages using OTT applications in a data format.

I declare under penalty of perjury under California law that the statements above are true and correct and are based on my own personal knowledge except where otherwise indicated.

Jianchong Yang

Executed this 15th day of August, 2017.

DECLARATION OF JERRY KUPSH

I, Jerry Kupsh, declare as follows:

1. I am currently the Director of Product Development (Messaging) at Verizon Wireless. I make this declaration based on personal knowledge. If called as a witness, I could and would testify competently to the facts stated herein.

2. Verizon Wireless offers wireless products and services to millions of subscribers. In this declaration, I refer to Verizon Wireless as simply "Verizon." Like many other wireless service providers, Verizon offers its subscribers Short Messaging Service ("SMS"), commonly known as text messaging, and Multimedia Messaging Service ("MMS").

3. In my role at Verizon, I am responsible for SMS and MMS messaging services. As part of these responsibilities, I have become familiar with the technical workings of SMS and MMS, including general processing and sending of messages across Verizon's messaging network and to other service providers' networks.

4. SMS has been commercially available since approximately the year 2000. The process described below for SMS has effectively been the same since its introduction. MMS has been commercially available since approximately the year 2003. The process described below for MMS has also effectively been the same since the introduction of that service.

5. I am aware that the federal government defines an "information service" as one that provides "a capability for generating, acquiring, storing, transforming, processing, retrieving, utilizing, or making available information via telecommunications." I am also aware that the federal government defines "telecommunications" as "the transmission, between or among points specified by the user, of information of the user's choosing without change in the form or content of the information as sent and received."

6. According to these definitions, SMS and MMS are "information services"—not "telecommunications" services. SMS and MMS are not merely the transmittal of data, untouched, directly from one user to another. Instead, SMS and MMS are information services that involve the routing, storage, processing, transformation, retrieval, and making available of information. In the following paragraphs, I provide background on the key technical attributes of SMS and MMS,

and I explain why data storage, processing, transformation, and retrieval are integral features of SMS and MMS services.

Technical Attributes of SMS and MMS

7. For both SMS and MMS, the process begins when a sender uses a software interface to generate a message. Under the messaging capabilities that Verizon currently offers its users, messages are not limited to text. In addition to text, messages can include multiple forms of media, including files in graphic, video, or audio formats. For example, a message can include a photograph, song, or video. When a message includes only text, it is referred to as an SMS message. A message that includes multimedia is an MMS message. This is true regardless of whether the message *also* includes text. In other words, a message that includes both text and multimedia is an MMS message, *not* an SMS message.

8. Both SMS and MMS messages take the form of a "network packet," which is a formatted unit of data. Certain communications protocols set forth conventions for formatting packets. As a result, computers are able to interpret network packets, and can essentially "look up" certain data points on a packet, based on the location of the data. Network packets consist of standardized "control information"— such as the source and destination network addresses, error detection codes, and sequencing information—as well as a "payload," which is the user-generated content.

9. When the sender generates an SMS or MMS message and hits "send," Verizon does not deliver the packet directly to the recipient. Instead, the message is routed through various networks to servers that store, process, and modify the message as necessary, and then deliver the message to the recipient or, if it cannot be delivered, destroy it. The exact steps that a message will take on its journey from sender to recipient depends on the characteristics of the message, the capabilities of the sender's and recipient's devices, the locations of the sender and recipient, and other factors. It is the job of Verizon's servers to analyze these factors and take the steps necessary to ensure delivery of the message.

10. Once a sender hits "send," an SMS or MMS message is routed to the wireless network that the sender's device is connected to. This wireless network determines whether the message is an SMS or MMS message, and routes the message accordingly.

11. In the case of an SMS message, the wireless network routes it to a server called the Short Message Service Center ("SMSC"). Essentially, an SMSC is a computer that is owned and operated by a wireless service provider such as Verizon. The SMSC is the portion of a wireless service provider network that handles operations such as routing, forwarding, processing, and storing incoming SMS messages on their way to desired endpoints. Verizon owns many SMSCs, each of which covers a designated geographical service area.

12. When a user sends an SMS message, the first task for Verizon's servers is to determine which SMSC should ultimately receive the message. The servers make this determination by looking up the recipient's area code on the network packet, and consulting the recipient's "home" SMSC to determine the geographical location of the recipient. In the meantime, the SMS message is stored on Verizon's servers. Ultimately, the servers route the SMS message to the SMSC that corresponds to the geographical location of the recipient.

13. Once an SMS message arrives at the final SMSC, it is stored there until the recipient device chooses to access it. Verizon's messaging server attempts to deliver the message for up to five days, if necessary. Although Verizon's servers cease attempts to deliver SMS messages after five days, messages can be stored for as many as ten days before the server ultimately deletes them.

14. This final SMSC undertakes a number of processing steps to ensure that the SMS message is deliverable to the recipient. For example, the SMSC analyzes the network packet to determine whether the recipient's device is eligible to receive SMS messages. The SMSC also looks up, on the network packet, whether any of the recipient's "user controls" or "blocks"—for example, controls that prohibit children from receiving text messages—will prevent delivery. The SMSC also determines whether the recipient can receive the SMS message. If the recipient's device cannot receive the message, the SMSC deletes the message. When an SMS message does

not reach the intended recipient, the SMSC sends a notice back to the sender that the message failed.

15. As set forth below, SMS messages sometimes require additional processing and transformation in order to render the message deliverable to the recipient. Once the SMSC determines that a message can be received by the recipient, the SMSC sends the message to the recipient's device. If the receiving device is unable to receive the message, then the wireless provider's facilities will continue to store all or part of the original message and will attempt delivery for up to five days.

16. The journey of an MMS message from sender to recipient is similar to that of an SMS message, but differs in a few key respects. *First*, when a sender first hits "send," the wireless network routes the message to a Multimedia Message Service Center ("MMSC") rather than to the SMSC. Like the SMSC, the MMSC is a computer that is owned and operated by Verizon. Also like the SMSC, the MMSC handles operations such as routing, forwarding, processing, and storing incoming MMS messages on their way to desired endpoints.

17. *Second*, because MMS messages contain more variable content than SMS messages (which only include text), MMS messages must be processed more extensively before delivery than SMS messages. As set forth below, the MMSC must process and transform the MMS file in various ways, depending on the file type and the recipient device's capabilities, to ensure that the message can be received.

18. *Third*, MMS messages, unlike SMS messages, are "pushed" to the recipient device in a notification. The MMSC sends an SMS message (through the SMSC) to the end device informing the device that it has an MMS message at the MMSC. The end device then uses the metadata from that SMS message to access the MMSC and retrieve the message. Because an MMS message is essentially a hyperlink, the end device must then access an Internet Protocol network to download the media content.

Data Storage is a Key Feature of SMS and MMS

19. Data storage is a key feature of both SMS and MMS. The fact that a text or multimedia message is stored on Verizon's servers in digital form means that a subscriber can

send a message to another person without any need for the other person to be available to receive it at that time. Without this "store-and-forward" capability, messages could only be exchanged if both the sending and receiving devices were connected to the cellular network at the time the message was sent. Likewise, the ability to store data gives the SMSC or the MMSC time to gather information necessary for delivering the message and to process the messages accordingly.

Data Processing and Transformation Are Key Features of SMS and MMS

20. Data processing is also a key feature of both SMS and MMS, as Verizon often must alter the packet "payload" of SMS and MMS messages in order to deliver them. Some devices simply cannot receive the messages in the same form that they were sent, so they must be modified. If Verizon could not process the messages in this way, fewer messages would be delivered to their intended recipients. Users would be particularly constrained in their ability to send and receive multimedia, which tends to require more processing than text.

21. Enhanced Messaging Service ("EMS") messages are just one example of SMS messages that require processing to complete delivery. If an SMS message includes more than 160 characters, it is an "EMS" message. EMS messages cannot be sent without processing. In particular, the sender device breaks the EMS message into multiple message segments that are then routed to the SMSC. Once the SMSC receives these multiple segments, the SMSC determines whether the recipient device is capable of receiving messages that exceed 160 characters. If it is not capable, then the SMSC simply sends each segment as a separate message, such that the recipient device will receive multiple, fragmented messages. If the recipient device *is* capable of receiving messages that exceed 160 characters, the SMSC routes the network packet along with metadata that tells the recipient device how to reconstruct the EMS message—i.e., the order in which the segments should go—so that the recipient device can combine the segments and present them as a single message. In this way, the SMSC alters the "payload" of the network package.

22. There are myriad other ways in which Verizon processes SMS messages to ensure deliverability and readability. For example, Verizon adds headers, callback numbers, dates, and other information to the network package, which gets combined with the text entered by the sender

(the payload) before it is sent to the SMSC. Once the packet arrives at the SMSC, additional processing occurs to translate the payload into a message that will be deliverable to, and readable by, the recipient. For example, different phones support different character sets. This means that some phones are capable of displaying characters that other phones cannot receive or display, such as a euro symbol (€), a c-cedilla (ç), or accent marks over letters, like an "e" with an accent aigu (é). Every time the SMSC receives a message, the SMSC consults the recipient device to determine what character set the device supports. Based on the recipient device's capabilities, the SMSC translates the SMS message, using a translation code, into a character set that will be deliverable and readable. Under this translation code, the SMSC will remove certain characters if they are not supported by the recipient device. This is true for the euro symbol (€). Other unsupported characters will be exchanged for a character that closely resembles the original character. For example, if the recipient cannot display a c-cedilla (ç), the SMSC will change this character into an ordinary "c." In this way, the SMSC alters the "payload" of the network package and the recipient's device will display characters that the sender did not insert into the message.

23. MMS messages also require extensive processing and transformation of data. MMS messages, by definition, include multimedia such as images, videos, and songs. These files must often be modified to ensure that the recipient device can receive and view the file. For example, the MMSC may need to modify the overall file size, color profile, resolution, or format of the multimedia. When an MMS message arrives at the MMSC, the MMSC examines the "user agent profile" of the end device to determine the recipient's capabilities for receiving and displaying multimedia. For example, the MMSC will consult the user agent profile to determine the maximum number of kilobytes that device can receive at once. If any modifications are necessary, the MMSC sends the MMS message through a transcoder that will adapt the content of the MMS message to comply with the user agent profile. (For example, by modifying the metadata in the network packet to shrink the overall file size.) In this way, the MMSC alters the packet payload.

24. Likewise, when an MMS message contains an audio file, the MMSC must check the profile of the end device to determine which file formats it can receive. If the end device

cannot receive the relevant file format, the MMSC triggers a transcoder within Verizon's networks to modify the format of the audio file. For example, if a user attempts to send a song to a recipient as an MP3 file, but the recipient device can only receive AMR files, the Verizon's servers will transcode that audio file from an MP3 to an AMR. Again, this involves an alteration of the packet payload.

SMS and MMS Allow Users to Retrieve, and to Make Available, Information

25. Another key feature of SMS and MMS is that these services allow users to "receive," and to "make available," information. As set forth above, to deliver an MMS message, Verizon stores that message on its servers at the MMSC and pushes a notification to the recipient's device that informs the device that an MMS message is waiting at the MMSC. The recipient device then receives the message. In this way, the sender is "making available" information, and the recipient is "receiving" information.

26. Likewise, MMS allows users to send hyperlinks to recipients. When the recipient "clicks" on the hyperlink in the MMS, the recipient's device accesses a webpage. In this way, the sender is "making available" information, and the recipient is "receiving" information.

I declare under penalty of perjury under the laws of the State of California that the foregoing is true and correct.

Executed on August 15, 2017, at Walnut Creek, California.

Jerry Rupsh