BEFORE THE
NEW YORK PUBLIC SERVICE COMMISSION

Comments of

CTIA – THE WIRELESS ASSOCIATION®

Docket No. 16-M-0330

In re Proceeding to Update and Clarify
Wireless Pole Attachment Protections

COMMENTS

Filed By CTIA – The Wireless Association®.

John Davidson Thomas
Ashley Yeager
Sheppard Mullin Richter & Hampton LLP
2099 Pennsylvania Ave., N.W., Suite 100
Washington, D.C. 20006-6801
(202) 747-1916
dthomas@sheppardmullin.com

Benjamin Aron
Matthew DeTura
CTIA – The Wireless Association®
1400 16th Street, N.W., Suite 600
(202) 785-0081
BAron@ctia.org

August 1, 2016

BEFORE THE
NEW YORK PUBLIC SERVICE COMMISSION

Comments of

CTIA – THE WIRELESS ASSOCIATION®

Docket No. 16-M-0330

In re Proceeding to Update and Clarify
Wireless Pole Attachment Protections

COMMENTS OF CTIA – THE WIRELESS ASSOCIATION

CTIA – The Wireless Association® ("CTIA") is pleased that the Commission has instituted this proceeding and appreciates the opportunity to supplement the material in its Petition to address the additional questions that the Commission set forth in its June 30, 2016 Notice.

CTIA does not seek a departure from the Commission's past rulings in the area of shared use of infrastructure, from the actions of other regulatory agencies, or from applicable safety codes or industry and field practices. Rather, CTIA seeks clarification and assurance that New York, one of the first jurisdictions to recognize that utility poles are critical infrastructure for the placement of wireless facilities, will maintain its leadership by ensuring a hospitable environment for the deployment of broadband facilities on utility poles. As described in Section IV and the attached declarations, CTIA's members are currently encountering real, significant obstacles to mobile broadband deployment, to the detriment of consumers and businesses throughout the State. By putting access deadlines, dispute resolution procedures, and the FCC's Telecom Rate formula in place for wireless attachments, the Commission will facilitate the deployment of the mobile telecommunications and broadband infrastructure essential to ensure that mobile broadband capacity and coverage keeps pace with rapidly increasing consumer demand, and that New Yorkers can enjoy soon-to-be-deployed 5G networks. CTIA members plan to invest in small cells and Distributed Antenna Systems ("DAS") infrastructure across the U.S. By granting the relief requested by CTIA, the Commission will encourage wireless carriers to invest in and deploy that infrastructure in New York.

These Comments supplement the information supplied in CTIA's Petition and this filing incorporates the Petition by reference.

I. Background

CTIA filed the underlying Petition to ask the Commission to join the large number of state regulatory commissions that have confirmed that wireless communications providers will receive just, reasonable and non-discriminatory access to utility poles for their attachments. New York has long been a leader in facilitating the deployment of advanced communications networks. CTIA seeks a continuation of this leadership during this particularly important time in the development of 5G and other network advancements that will provide major speed and capacity increases for mobile broadband.

In the Petition and in these Comments CTIA seeks a Commission ruling that will ensure that:

1. The Commission's regulation of pole attachments, and the protections that exist for wire-based attachments, will apply with equal force to the facilities of wireless communications providers;
2. The Commission will establish and enforce detailed timelines for entering into access agreements, completing the permitting and make-ready review processes, and granting final approval to attachers;
3. The Commission will resolve disputes regarding the rates, terms, and conditions of pole attachments on an expedited basis;
4. The Commission's rate principles for wireless attachments will track those in place at other regulatory agencies, including the FCC; and
5. The Commission will adopt any other pro-competitive, pro-deployment measures supported by the record.

CTIA's Comments here supplement the requests made in its Petition. These Comments will first provide a brief overview, including visual evidence, of the kinds of wireless and commercial mobile radio service ("CMRS") facilities that its members and other providers attach to utility poles. After outlining the pole survey, engineering, permitting and attachment process, these Comments will identify the obstacles that wireless providers have confronted in deploying their facilities on utility poles in New York.

Finally, these Comments will propose specific remedies for addressing these problems. Clear rules, including access rules, timelines, and a rental-rate formula that produces reasonable, cost-base rates, coupled with clear enforcement remedies, will assist New York in ensuring fulfillment of its broadband goals.

II. Overview of Wireless Attachments to Utility Poles

The wireless facilities that CTIA members attach to utility poles come in a variety of shapes and sizes, but they share a number of common characteristics. These "small cell" or "micro-cell" units communicate directly with end users' mobile devices to provide connectivity in ordinarily hard-to-access areas, areas in need of additional network capacity, or areas where traditional "macro-cell" solutions are unworkable or inadequate. As part of an integrated network, they are connected with other cell sites on the network and handle voice and data traffic in the same manner.

Different wireless units and associated equipment are attached in different ways, including at the pole top, lower on the pole itself, or even attached to the existing steel "messenger" strand (the supporting metal wire to which wire-based telecommunications and cable network providers lash their fiber-optic, coaxial and copper lines). Many units will include whip antennae, panel arrays, and secure enclosures containing active electronic devices. Supporting facilities, including power supplies and radio heads, are sometimes attached to the pole, while in other cases these components may be located on a pad or pedestal adjacent to the pole.

Certain units, typically those deployed by individual carriers, will support the services of only the carrier that installs them. On the other hand, neutral host DAS support the services of multiple carriers from a single site.

The photos and accompanying descriptions in Figures 1 – 5 provide an overview of the diversity of units being installed today. Notwithstanding this diversity, all – without exception – can be accommodated under existing safety standards and permitting processes.

Figure 1

Multi-panel array installed at the pole top. Note the light-grey pipes of conduit running up to the racked panel array. The conduits, and the communications lines inside them, are known as "risers."

Figure 2

Small cell installed at the pole top. Note that this pole-top antenna is affixed to the pole with a bracket that is bolted to opposite sides of the pole.

Figure 3

Small cell installed at the top of a new, tall utility pole. Note here the presence of enclosures toward the bottom of the pole, a few feet above the ground. These enclosures likely contain the active electronics for this small cell.

Figure 4

Panel arrays installed on cross arms in the electric space. This is a good example of a small-cell facility attached to a two-plank cross arm in the electric space of the pole.

Figure 5

Pole-top installation in a residential neighborhood. This photo shows that common utility poles found in residential neighborhoods can serve multiple compatible functions, including wireless communications, wire-based communications, electric service and street-light service.

III. The Pole Attachment Process

The process and standards for deploying wireless communications facilities to utility poles are identical in every important respect to those followed for generations for wire-based pole attachments. But because wireless attachments are relatively new to the scene, there is no long history of shared use of poles to function as a point of reference. Accordingly, some utility owners may not (or choose not to) have a clear understanding about how safety codes and access procedures should apply to wireless, and deny wireless attachment requests or delay them indefinitely. Pole owners' impulses to exclude wireless attachments typically prevail in the absence of clear regulatory guidelines, which is one reason why the Commission should establish such guidelines for wireless.

Here is how the attachment process ideally works – for wireless and wire-based attachments alike:

- Just as it is in the wire-based realm, the first step in the wireless attachment process is to contact the utility pole owner and negotiate and execute a pole attachment agreement.
- Once a carrier has entered into a new pole attachment agreement, it determines where the wireless facilities should be placed. Network engineers survey target locations and identify poles that might accommodate the carriers' attachments. These poles are inspected, analyzed, photographed, and mapped. Engineering studies and drawings are developed detailing how the new facilities will be accommodated on the pole and what make-ready work is required. These materials comprise the pole permit application and are submitted to the pole owner. Taller poles are generally preferred, as are higher positions on poles – at the pole top itself, or in the top regions of the pole in the electric space. Congested poles with many pre-existing attachments are generally avoided because achieving appropriate clearance distances and physical-load criteria can present particular challenges – and can be extremely expensive.
- After the wireless provider has conducted the engineering analyses of the target poles, it submits these to the pole owner. The utility pole owner reviews the materials in the permit application to ensure that the proposed attachments and make-ready work comply with the National Electrical Safety Code ("NESC") and the utility's own construction standards. The utility will approve the application if it is compliant, propose

modifications if it is not, or deny the application if there are serious questions of safety, reliability, or generally accepted engineering practices.

- Once a permit is approved, the utility sends a make-ready estimate to the applicant. After the estimate is accepted (and applicable up-front amounts paid), the make-ready work is scheduled and completed, and the new facilities are attached. A post-construction inspection is conducted, and upon final approval, the cell is activated.

This is how the process is supposed to work. But as CTIA members have learned, would-be attachers face delays in every stage of this process. As detailed in the next section, contract negotiations are put on indefinite holds, and permit application and engineering reviews drag on interminably – moving even more slowly than the local zoning process. And pole owners often impose impossible-to-meet engineering and design requirements, the purpose of which is to exclude wireless facilities outright.

That is why CTIA requests specific guidelines, timetables, and expedited dispute resolution procedures for wireless attachments.

IV. Wireless Deployments On Utility Poles In New York Today

A. Resistance to Wireless Attachments By Utilities is Pervasive

Expanded small-cell deployment in New York is critical to meet growing demands for connectivity, including soon to be deployed 5G networks. Many CTIA members, including AT&T, Sprint, T-Mobile, and Verizon, are already deploying outdoor small cells and DAS across the country; other companies, including ExteNet, Crown Castle, and American Tower, are also major competitors in the small cell and DAS areas. However, wireless providers' attempts to expand their networks on New York utility poles have frequently been made difficult or impossible due to unreasonable obstruction by utility pole owners.

As an example, for several years T-Mobile has tried to attach small-cell devices to utility poles in New York State. As of the time of this submission, T-Mobile has been unable to attach a single small-cell device to a single utility-owned distribution pole in New York, and not for want of trying.[1]

The attached Declaration of Kevin Griswold, Senior Director for Engineering & Development for T-Mobile in the Northeast, provides details regarding the barriers T-Mobile has encountered. Generally, T-Mobile has encountered unreasonable delays across every stage of

[1] *See* Griswold Declaration at ¶ 10.

the deployment process. There have been delays in receiving pole attachment agreements, in negotiating the agreements, in the permit-application process, and in the make-ready process.[2] T-Mobile has been told that certain plant configurations are impossible to accommodate and has received unreasonable proposals for access terms and rental rates.[3]

Mr. Griswold details recent attempts to secure access to several Niagara Mohawk utility poles on the campus of Syracuse University.[4] As Mr. Griswold explains, T-Mobile pursues multiple solutions to addressing network enhancement issues simultaneously. In this case, while T-Mobile pursued pole attachments with Niagara Mohawk, it had also discovered a nearby parcel of undeveloped land on which a monopole could be placed for T-Mobile's facilities.[5] Ultimately, it took less time to navigate the complex local zoning-approval process than to secure access to Niagara Mohawk's utility poles, with more robust broadband connectivity for consumers hanging in the balance.[6]

Other CTIA member carriers have experienced similar problems. In his Declaration, Verizon Wireless' Randall Wilson, Senior Manager for Project Implementation, describes the delays that his company has encountered in securing attachment agreements for its wireless devices. Mr. Wilson is responsible for siting activities in 52 upstate counties, north of and including Orange and Dutchess Counties.[7] He describes Verizon's 28-month fruitless pursuit of a wireless attachment agreement with a major New York utility that owns several upstate electric utilities.[8] After what appeared to be successful negotiations, and a statement from the utility in late 2014 that the agreement was ready for execution, the utility changed course.[9] In January 2015, the utility said that it needed to continue reviewing the agreement because of "internal concerns" that were raised about wireless attachments. [10] Despite Mr. Wilson's note that the draft agreement contains standards that are stricter than those in the NESC, this "review" remains ongoing 19 months later.[11] To date, no agreement has been signed and Verizon has not been permitted to attach to any of this utility's poles.

---

[2] *Id*. at ¶¶ 11, 13-14, 21.
[3] *Id*. at ¶ 11 .
[4] *Id*. at ¶ 15.
[5] *Id*. at ¶ 16.
[6] *Id*.
[7] *See* Wilson Declaration at ¶ 2.
[8] *Id*. at ¶ 3.
[9] *Id*. at ¶ 4.
[10] *Id*. at ¶ 5.
[11] *Id*. at ¶ 6.

Claims of restrictive "engineering" and "safety" standards are another tactic that pole owners use to exclude attachments that they would prefer not to accommodate. Mr. Wilson relates the case of another electric utility that has used this strategy for blanket access denials. In this case, if a pole contained *any* of 13 different types of electric or communications equipment, the utility excluded that pole from consideration for wireless attachments.[12] Some of the facilities listed can be bulky and heavy and, when combined with other facilities, result in an excessive load, or lack of required separations on the pole. But this is precisely the sort of determination that should be made on a case-by-case basis, by applying the universally accepted NESC. Prejudging whether a configuration can meet these industry standards with deliberately exclusionary blanket prohibitions is not reasonable. If these exclusions ultimately were deemed permissible, hundreds of thousands (or more) of poles across New York State would be disqualified from supporting small-cell installations.

One of the 13 disqualifying items on this utility's "Do-Not-Fly" list bears special mention: "risers."[13] A riser is simply an electric or communications cable that attaches to and goes up ("rises") along the side of the pole – from the electric space (at the top of the pole) to the ground; from the electric space to the communications space (located 40 inches below the electric facility); within the electric space; or within the communications space. The small-cell site in Figure 4 shows electric-facility risers and exposes the patent unreasonableness of this prohibition. Risers are often essential to communications deployments. If the presence of risers could permissibly disqualify wireless attachments to a pole, many hundreds of thousands of poles would be excluded from consideration on the basis of this item alone.

B. Attachment Techniques That the NESC Allows Should Be Permitted

So long as a wireless attachment can be made to a utility pole in a fashion that complies with the National Electrical Safety Code, that attachment should be allowed. In one expert report filed in 2015 with the Arkansas Public Service Commission, NESC expert David J. Marne testified that communication antennas can be installed on pole-tops in a safe and reliable way, provided that the standards outlined in the NESC are followed. He went on to state that "utilities that deny applications for pole top communication antennas on distribution and transmission poles are ignoring the safety rules in place and ignoring the accepted good practice in the

[12] *Id.* at ¶ 7.
[13] *Id.*

industry regarding such installations."[14] Similarly, in the California PUC proceeding regarding CMRS attachments, AT&T submitted a report that addressed the safety impact of various wireless attachments, including pole-top attachments.[15] AT&T's experts emphasized that, as long as CMRS attachments adhered to the safety regulations set out under California law,[16] appropriate safety clearances and pole stability could be maintained – just as wireline attachers were already doing throughout California.[17]

The sum and substance of these expert views and the findings of other Commissions is that the same administrative and make-ready processes, safety standards, and engineering practices used for wire-based access can be used for wireless access as well. The physical properties of utility poles are no different in New York than they are in any other state – and the fact that thousands of these attachments have been made across the United States to date, and will be made in the months and years ahead, belies the exclusionary assertions and actions of some New York pole owners. Those actions put New Yorkers at a broadband disadvantage as compared to consumers in other states.[18]

The access problems in New York to date are much broader than whether specific construction techniques can be used to facilitate access. But in casting a wide net for solutions, the Commission raised specific questions regarding certain construction techniques, some of which are most commonly used in connection with wire-based facilities. The Commission posed questions about the following techniques:

1. Boxing
2. Vertical connectivity or "risers"
3. Attachment in electric space
4. Attachment of pole-top antennae

---

[14] *In re Rulemaking Proceeding to Consider Changes to the Arkansas Public Service Commission's Pole Attachment Rules*, Docket No. 15-019-R, Expert Report of David J. Marne at 13-14 (filed Aug. 19, 2015).

[15] *Order Instituting Rulemaking Regarding the Applicability of the Commission's Right-of-Way Rules to Commercial Mobile Radio Service Carriers*, R. 14-05-001, Informational Report of AT&T Mobility (filed Oct. 21, 2014).

[16] California has adopted its own safety code (GO-95) which is analogous to the NESC.

[17] *Id*. at 12, 16-19.

[18] While not the principal focus of this proceeding, CTIA members also are experiencing delays associated with utility and Commission approvals for mobile installations placed on utility *transmission* structures. *See* Declaration of Kevin Griswold, T-Mobile ¶¶ 18-23; Declaration of Danielle Petti, Sprint ¶¶ 2-6. These delays, coupled with the barriers our members encounter on utility *distribution* infrastructure, are two examples of the challenges confronting mobile broadband deployments that the Commission is uniquely situated to alleviate.

1. Boxing

The practice of "boxing," used with wireline attachments to preserve pole space by placing horizontal lines at the same height on both the "road side" and the "field side" of the pole, is applicable. Poles can accommodate wireless attachments and supporting equipment placed on multiple "sides" of the pole, and in fact they already do so in many jurisdictions. In fact, Figures 1, 2, and 4 at pages 5, 6, and 8 clearly show attachments on multiple sides of poles.

2. Vertical Connectivity (Risers and Antennas) and 3. Electric Space Attachments

CTIA is uncertain what is meant by the term "vertical connectivity." To the extent, however, it refers to a conductor running up the side of the pole, enclosed in PVC or similar protective housing (a "riser"), or to an antenna mounted on or adjacent to the pole, these are integral elements of wireless attachments on utility poles and can be easily accommodated.

Recall that the electric company that Mr. Wilson of Verizon Wireless referred to in his Declaration attempted to exclude all poles with risers. Figure 4, for one, shows that risers and wireless facilities on the same pole are compatible, and also affirmatively answers the Commission's question about whether wireless facilities may be placed in the electric space. The panel antennae in Figure 4 are not directly attached in the electric space, but the cross-arms to which the panels are attached are. There are two sets of risers visible on this pole – one serving the small-cell panels, and the other the electric primary at the top of the pole. The electric riser was likely installed prior to the wireless antennae and the risers serving them, and is clearly compatible with wireless pole attachments.

4. Attachments of Pole-Top Antennae

Figures 1, 2, 3, and 5 all show pole-top mounts. On poles such as those appearing in Figures 1, 3, and 5, risers extend into and through the electric space. Because of the proximity of new attachments to energized electric facilities, these wireless installations must be performed by workers qualified to work in the electric space – either an employee of the electric company or a utility-certified contractor that the utility uses for its own electric construction needs. The fact that wireless equipment is close to energized electric facilities is a consideration that can be, and routinely is, readily addressed. It is certainly not a legitimate basis for a blanket exclusion.

CTIA acknowledges that there may be some learning curve while pole owners adapt to devices that differ from the millions of wireline attachments they have been installing for

generations. But wireless attachments are not unprecedented in New York[19] and are common in other states, and CTIA members have confidence that the Commission will be able to enforce fair and consistent treatment for wireless attachments as small cell and DAS deployments spread across the state.

V. The Commission Should Reaffirm Its Commitment To Wireless Broadband Deployments and Access To Utility Poles On Reasonable Terms & Conditions

Leading regulatory agencies, including this Commission, have adopted specific, enforceable access provisions, rates and timelines for pole attachments.[20] Given the increasing importance of wireless broadband deployment, the Commission should assure providers that the same level of certainty adheres to wireless attachments in New York State. Other agencies, including the FCC[21] and the state regulatory authorities in Connecticut,[22] California,[23] Utah,[24] Washington,[25] Louisiana,[26] Ohio,[27] Massachusetts,[28] and Arkansas,[29] have taken this step by issuing regulations setting standards, rates, and timelines for wireless attachments – in many cases, simply by affirming that pole attachment regulations apply identically to wireline and wireless attachments. New York should join these states and affirm that wireless attachers will be subject to fair and reasonable treatment when doing business in the State.

---

[19] For example, National Grid was granted permission to deploy wireless attachments in 2004. *See Order Approving Petition with Modifications*, Joint Petition of Niagara Mohawk Power Corp. and National Grid Commc'ns Inc. for Approval of a Pole Attachment Rate for Certain Wireless Attachments to Niagara Mohawk's Distribution Poles, NY PSC Case 03-E-1578 (Apr. 7, 2004).

[20] *See Opinion and Order Setting Pole Attachment Rates*, In re Certain Pole Attachment Issues Which Arose in Case 94-C-0095, NY PSC Case 95-C-0341 (June 17, 1997).

[21] *In re Implementation of Section 224 of the Act: A National Broadband Plan for Our Future*, Report & Order & Order on Reconsideration, WC Docket No. 07-245 (Apr. 7, 2011).

[22] *Petition of Fiber Technologies Networks, LLC for Authority Investigation of Rental Rates Charged to Telecommunications Providers by Pole Owners*, Docket No. 11-11-02, Decision (Conn. PURA Sept. 12, 2012).

[23] *Decision Regarding the Applicability of the Commission's Right-of-Way Rules to Commercial Mobile Radio Service Carriers*, Decision 16-01-046 (Cal. PUC January 28, 2016).

[24] UTAH ADMIN. CODE r. 746-345-1.

[25] *In the Matter of Adopting Chapter 480-54 WAC Relating to Transmission Facilities*, General Order R-582, Order Adopting Rules Permanently (Wash. Utilities & Transportation Commission, Oct. 21, 2015).

[26] *In re: Review of the General Order dated March 12, 1999 (Pole Attachments)*, Docket No. R-26968, General Order (La. PSC August 6, 2014).

[27] *In the Matter of the Adoption of Chapter 4901:1-3, Ohio Admin. Code, Concerning Access to Poles, Ducts, Conduits, and Rights-of-Way by Public Utilities*, Finding & Order, Case No. 13-579-AU-ORD (Ohio PUC July 30, 2014).

[28] MASS. GEN. LAWS ch. 166, § 25A.

[29] *In the Matter of a Rulemaking Proceeding to Consider Changes to the Arkansas Public Service Commission's Pole Attachment Rules*, Order No. 5, Docket No. 15-019-R (Ark. PSC June 24, 2016).

A. The Need for Efficient Pole Access Today

To keep pace with the current wave of demand for mobile broadband and advanced mobile products and technologies, and anticipated future demand for 5G, a large amount of infrastructure deployment is needed.[30] Small cell, DAS, and pole-top equipment are crucial to mobile broadband in New York.[31] In particular, deployment of 5G networks will be far more dependent on small cells, DAS, and pole-top equipment than predecessor networks, which relied on the macro-cell network model. This is because 5G networks use shorter range high-band or millimeter-wave spectrum – spectrum above 24 GHz – which requires sites located closer to users and at more frequent intervals. The host of consumer benefits (including faster data speeds, lower latency, fewer coverage gaps, and capacity to handle more devices at once) that this technology brings thus requires that 5G networks be built on infrastructure that is both prevalent and located close to consumers. Utility poles, which are placed at short intervals and are located relatively close to street level, offer an ideal – and critical – platform for small-cell facilities.

While pole access is essential to the successful deployment of 5G systems, it is no less critical for other mobile broadband deployments. Facilitating pole access will enable carriers to offer more robust mobile broadband in New York today on existing 3G and 4G networks. Putting small cells closer to consumers helps resolve gaps in coverage that can be created even in dense urban areas. Equally important, small-cell deployment increases network capacity, helping to accommodate exploding demand for mobile broadband access.

The wireless industry has made significant investments in infrastructure throughout the last ten years and will be investing billions more in buildout to enable advanced 4G and 5G networks. Restrictions on pole access for small cell, DAS, and pole-top attachments create a significant barrier to investment.[32] In jurisdictions where carriers face restricted access to necessary infrastructure, carriers' investment and deployment will lag considerably.[33] These jurisdictions will trail others in mobile coverage, capacity, and data speeds. Such results are avoidable where reasonable pole access can be facilitated.

Utility poles are a near-ubiquitous resource on which wireless infrastructure must be located, and CTIA respectfully submits that, unless the Commission grants CTIA's petition, New

---

[30] *See* Tidwell Declaration at ¶ 3.
[31] *Id*. at ¶ 2.
[32] *Id*. at ¶ 3.
[33] *See* Griswold Declaration at ¶ 22; Petti Declaration at ¶¶ 2, 5; Tidwell Declaration at ¶ 3.

York could be left behind with regard to efficient deployment. If wireless attachers encounter fair and efficient standards and procedures here in New York, such as those that they see elsewhere, these investments will be made in shorter timeframes and with lower cost, both significant benefits to consumers.

B. The Commission Should Adopt Reasonable Access Timelines

Towards this end, as CTIA proposed in its Petition, the Commission should adopt timelines "to ensure that carriers can accurately predict construction timelines in New York and plan accordingly."[34] Access timelines that other regulators have adopted provide variations on the FCC's timeline, with similar timetables available for the same steps. For example, the Louisiana process requires application processing within 15-45 days; make-ready surveys within 45-75 days; and provision of make-ready estimates within 15-45 days, depending on the number of pole attachments proposed.[35] The Utah process requires the utility to approve or reject an application and provide a make-ready estimate within 45-90 days, and to complete all make-ready work within 120-180 days, depending on the number of pole attachments proposed.[36] The Ohio process, following the FCC's procedures, allows utilities 45 days to perform make-ready surveys, 14 days to provide a make-ready estimate, and 60 days to perform make-ready work (with extensions to some deadlines permitted for large numbers of attachments or pole-top attachments).[37]

CTIA ultimately recommends adoption of defined timelines similar to those described above, or as proposed in its Petition.

VI. <u>The Commission Should Adopt The FCC's Telecommunications Rate For Wireless Attachments</u>

The Commission has asked whether unique cost considerations applicable to wireless attachments should affect the rate methodology adopted. The answer to the Commission's overarching question is no; there are no unique cost considerations applicable to wireless attachments that would not be captured by the FCC Telecommunications Rate methodology that CTIA proposes. (These same cost considerations are also captured in the "Cable Rate" formula already in place here in New York).

---

[34] Petition of CTIA to Initiate a Proceeding to Update and Clarify Wireless Pole Attachment Protections, at 8.
[35] *In re: Review of the General Order dated March 12, 1999 (Pole Attachments)*, Docket No. R-26968, at ¶¶ 4(a)-(d).
[36] UTAH ADMIN. CODE r. 746-345-3(C).
[37] *In the Matter of the Adoption of Chapter 4901:1-3*, Case No. 13-579-AU-ORD, at ¶¶ 26-30.

There are two cost components associated with a third-party attachment made to a utility's distribution pole: (1) the non-recurring make-ready costs associated with "making" the pole "ready" for the new attachments; and (2) the recurring annual pole-attachment rental rate.

As to Item (1), the pole attacher pays 100% of these costs. If a new pole is required, the requesting party pays for that – as well as the costs of the electric company and all other parties attached to the pole that must move their facilities to the new pole. If the new attachment can be accommodated merely by re-arranging the existing facilities on the pole, the requesting party pays for that too.

As for the recurring rental rate, the prevailing formulae – both the one that already is in place in New York and the one that CTIA proposes be applied for wireless providers' attachments – capture the attacher's proportional share of the annual carrying costs of the pole. Those carrying costs include administration, depreciation, maintenance, taxes, and return components. The allocation factor of the current New York formula is simply the ratio of the amount of space used by a communications attachment to the total amount of usable space on a typical utility pole. The amount of usable space used by such attachment is presumed to be one foot, and the amount of total usable space on a utility pole is presumed to be 13.5 feet. The formula that CTIA proposes (the FCC's "Telecom Rate" formula) contains identical space presumptions, but the space allocation factor differs somewhat because it includes a ratable allotment of 2/3 of the cost of the unusable space to the attaching entities. For example, if there are 5 attaching entities on the pole, the formula apportions 2/3 of the costs of the unusable space among those 5 attachers and includes that amount in the allocation factor. While the arithmetic may be more complex, it produces a cost allocation that more appropriately reflects pole use by wireless attachments, which often occupy more than one foot of space on a pole.

The Commission also has asked the following specific questions, to which CTIA provides these answers:

1. *Whether the existing cost methodology for telecommunications attachments should be applied to wireless attachments, or if not, what modifications are necessary.*

CTIA believes that the FCC's Telecom Rate formula should be applied to wireless attachments. That formula directly allocates to attaching parties a ratable portion of the "unusable" pole space – that part of the pole that is buried in the ground and the portion needed to provide vertical clearance for the lowest communication wires. Under both the existing New

York and FCC formulas, this amount of space is presumed to be 24 feet (6 feet to be buried, and 18 feet to the first attachments). Everything above the 18-foot mark is considered usable space. Under both the existing New York formula and CTIA's proposal, it is presumed that one foot of usable space will be used for the attachment. Depending on the number of feet actually used by the attachment, that presumption can be replaced with the actual amount of space occupied. The use of presumptions is a particularly important feature of these flexible yet well-understood rate approaches: they can be readily adjusted to fit a variety of attachment configurations. If an attachment uses only one foot (or less) of pole space, then the presumption applies. But if it uses more, the actual amount of usable space to be occupied by the attachment becomes the numerator input in that part of the cost-allocation factor of the rate formula.

2. *Whether the presumptive minimum amount of space used by a wireless attachment should be one foot.*

Yes. As explained in the response to No. 1, if the actual attachment uses more than one foot of usable space, which some types of wireless attachments do, the amount of space occupied can be increased for purposes of calculating the annual rental rate for that attachment.

3. *Whether the "usable space" component of the formula should include only uses which exclude use of that space by others.*

Yes. Any convention that charges for space that is still capable of being used by another attachment does not reflect the physical realities of pole use and occupancy and carries the risk of producing an impermissible double-recovery for the pole owner. Likewise, Section 119a of the Public Service Law defines "usable space" as "the space on a utility pole above the minimum grade level *which can be used for the attachment of wires and cables*" (emphasis added). The Commission should clarify that the "usable space" component of its rate formula includes uses which exclude use of that space by others only. Wireless attachers should not be charged rent for uses of pole space that do not prevent other attachments.

4. *Whether wireless attachments should be charged incremental rent for non-exclusionary pole space used by facilities located between points of attachment, which do not prevent other attachments (e.g., risers).*

No. Please see response to Question No. 3. By following this approach, attachments will be differentiated only according to the amount of space that they actually use, which is consistent with nearly 40 years of pole attachment regulation and industry practice.

VII. The Commission Should Provide for Effective, Streamlined Dispute Resolution Procedures to Ensure Prompt Utility Pole Access

Key to the creation of a predictable and efficient scheme for pole attachments is a fast, fair dispute resolution procedure. As shown in Section IV and in the attached declarations, wireless providers today face an uphill battle in attaching their devices to utility poles in New York State, and will continue to struggle without expedited dispute resolution provisions.

CTIA believes strongly that while negotiated resolutions are always preferable, the process for small-cell attachments on utility poles has been abused in the past. But before invoking the Commission's dispute resolution procedures, the Commission (as the FCC has done) should require the parties to attempt executive-level escalation of contract and access negotiations.[38] If those efforts prove fruitless, either because an agreement cannot be reached or because one of the parties refuses to engage at this higher level, then expedited, fast-track complaint procedures could be invoked. CTIA suggests a dispute resolution framework that requires that disputes between pole owners and attachers be resolved finally within 45 days of the filing of a complaint.

A 45-day timeline, while aggressive, would be sufficient for resolving basic access denials. Schedule and process adjustments could be made, if necessary, for complex cases. In all cases, the Commission should commit itself to making every effort to resolve complaints as expeditiously as possible,[39] and all options should be on the table to achieve this goal – including staff-sponsored mediation.[40]

IX. Conclusion

Wireless providers have limited resources available for new investment, and they will seek to apply those resources to their best use. CTIA members plan to invest in infrastructure like small cell and DAS deployments across the U.S. However, deployments are far more likely to occur where wireless carriers enjoy the legal protections applicable in other jurisdictions, and to which they are entitled under law. Carriers' experiences and the history of pole attachments in New York and across all the states have shown that regulatory safeguards are critical to protect and promote wireless attachments and investment. New York will put itself in the most

[38] 47 C.F.R. § 1.1404(k); *In re Implementation of Section 224 of the Act*, WC Docket No. 07-245, at ¶ 105.
[39] *In re Implementation of Section 224 of the Act*, WC Docket No. 07-245, at ¶ 102.
[40] Whatever the ultimate dispute resolution timeframe put in place, relatively short interim deadlines for items like briefing are essential. The FCC, for example, provides 30 days for a respondent to file its response to an initial complaint, and 20 days for the complainant to file a reply. 47 C.F.R. § 1.1407(a).

advantageous position to receive wireless investment if its regulations clearly provide fair and equal treatment for wireless attachments to utility poles.

For these reasons, Petitioner CTIA requests the Commission to adopt standards for wireless attachments to utility poles consistent with its Petition and these Comments.

August 1, 2016

Respectfully submitted,

John Davidson Thomas
Ashley Yeager
Sheppard Mullin Richter & Hampton LLP
2099 Pennsylvania Ave., N.W., Suite 100
Washington, D.C. 20006-6801
(202) 747-1916
dthomas@sheppardmullin.com

Benjamin Aron
Matthew DeTura
CTIA – The Wireless Association
1400 16th Street, N.W., Suite 600
(202) 785-0081
BAron@ctia.org

ATTORNEYS FOR CTIA

Attachments

A. Declaration of Kevin Griswold, T-Mobile

B. Declaration of Randall Wilson, Verizon Wireless

C. Declaration of Danielle Petti, Sprint Corporation

D. Declaration of Ryan Tidwell, AT&T Services, Inc.

E. Expert Report of David J. Marne, filed in Arkansas PSC Proceeding No. 15-019-R, Aug. 19, 2015

ATTACHMENT A

BEFORE THE
NEW YORK PUBLIC SERVICE COMMISSION

In re Proceeding to Update and Clarify Wireless Pole Attachment Protections

Docket No. 16-M-0330

DECLARATION OF KEVIN GRISWOLD, T-MOBILE NORTHEAST LLC

I, Kevin Griswold, hereby declare the following:

This Declaration provides information related to my experience with the siting of T-Mobile's wireless antenna and related equipment in the State of New York. I am submitting this Declaration in support of initial comments filed by the CTIA, which represents T-Mobile as a member company, in this proceeding.

1. I am Senior Director, Regional Development for T-Mobile's Northeast Region and have supported the engineering and network development interests of T-Mobile since 1996. I am currently responsible for overseeing the regional management of resources for the deployment of wireless facilities and ensuring adequate coverage and capacity to meet the telecommunications needs of our customers in the Northeast — including but not limited to New York, New Jersey, Connecticut, Maine, Massachusetts, Rhode Island, New Hampshire, Vermont, Pennsylvania, Delaware, Maryland, Washington DC, and Virginia.

2. Before addressing the specific issue of wireless attachments to utility distribution poles, some background regarding T-Mobile, will provide context.

3. T-Mobile is a member of CTIA, the Petitioner in this proceeding. T-Mobile is the fastest-growing wireless provider in the United States. It is the largest independent wireless service

provider in the U.S., serving 67.4 million customers who we serve by providing innovative high-quality and competitively priced products and services.

4. Spectrum and infrastructure are two critical ingredients to delivering for our customers. My job, and this Declaration, are devoted to infrastructure deployment.

5. T-Mobile's ability to co-locate, upgrade and maintain wireless facilities, including small cell technology, on utility distribution poles (and larger electric transmission support structures) is essential to the Company's need to expand capacity and increase coverage. Utility poles and electric transmission facilities provide viable solutions for increasing wireless capacity and coverage; and, to meet the growing demands of our customers for advanced wireless services, including high-speed mobile broadband. Notably, these facility solutions and technology advancements support our fulfillment of public safety mandates (such as E-911).

6. Use of existing utility infrastructure – particularly utility distribution poles is critical because of public and local-government resistance to the installation of even modest, dedicated support structures.

7. For example, T-Mobile has encountered significant resistance to the installation of standalone towers and/or monopoles from some New York municipalities. Other municipalities are using their power over public rights-of-way to impose unreasonable requirements on wireless providers. Numerous municipalities across New York State give first priority to municipally-owned structures in siting wireless antennas and related equipment. Only after demonstrating that no municipal structure would meet the provider's coverage needs, may the provider propose an alternative. And in some instances, there is no guarantee that those alternatives will address the coverage objective. In addition, the terms and conditions offered for some municipally-owned

properties are often onerous and unreasonable an ultimately infeasible as compared with the terms negotiated with private landlords.

8. T-Mobile's need to build its own towers or monopoles will continue. But the use of utility distribution poles to address coverage gaps and add capacity, in my view and in light of my experience is a "win-win" solution. T-Mobile gets access to support facilities it needs to build out its infrastructure, including the deployment of small cell technology. Local governments avoid sensitivities, controversies and aesthetic concerns associated with the construction of new support structures, pole owners get additional revenue from existing (and paid-for) assets – and most important, our customers get better, even more robust and reliable service.

9. Here are some additional benefits of placing wireless attachments on utility poles:

- More complete coverage for E-911.
- Enhanced triangulation for pinpointing calls in emergencies.
- Expanded coverage for First Responders' voice and data needs.
- Increased competition
- Expansion of rural broadband services.
- Fewer new tower and dedicated monopole sites

10. Despite these obvious "win-wins," and the benefits that would extend to all stakeholders, T-Mobile's stark reality is that it has been blocked from making a *single* wireless pole attachment to a *single* utility pole in the State of New York. And it's not for want of trying.

11. T-Mobile has endured the full menu of pole-owner obstructions. These include outright prohibitions against wireless facilities, patently unreasonable "take-it-or-leave" contract terms, exaggerated and in some cases unfounded safety "concerns," "negotiating" delays and general stonewalling and prohibitive rates.

12. On the issue of safety, wireless attachments can – and increasingly are – attached to utility poles in an entirely safe manner. The National Electrical Safety Code ("NESC") permits these attachments and the NESC is – and here in New York – should be the guide.

13. Some pole owners actually seem willing to enter into agreements with T-Mobile for the co-location of pole-top mounted wireless antennas and related equipment on utility poles. One incumbent telephone company that owns poles has a template agreement that permits pole-top attachments and contemplates make-ready – including pole replacements – when necessary to accommodate a new attachment. The terms of this template generally are reasonable and would allow T-Mobile (and others) to access poles and build with relative efficiency. But there is one big problem. The pole owner's construction guidelines include a provision that requires wireless attachers to obtain the approval of the power utility companies prior to attaching to the pole. The power utilities jointly own or use most of these telephone company poles. Every time, without exception, the electric utility has exercised its veto power on our attachments.

14. As for New York's electric utilities, T-Mobile has been rebuffed in its every attempt to gain reasonable access to their utility poles. For example, Con Edison, and its affiliate O&R, have refused to negotiate fair and reasonable rates, terms and conditions of access. Con Edison's approach essentially was "take it or leave it."

15. In one instance, T-Mobile was in initial discussions with Niagara Mohawk to place wireless equipment on its distribution poles within the campus of Syracuse University. Specifically, T-Mobile had identified and initially discussed several Niagara Mohawk owned utility poles upon which T-Mobile could attach wireless equipment to address a known coverage gap.

16. T-Mobile's practice is to concurrently pursue multiple options to address a known gap in coverage. This instance was no exception. While T-Mobile attempted to negotiate with Niagara

Mohawk, it also filed for zoning approval for a nearby raw land site, upon which a new cell tower construction would be required. The local zoning process was faster than the "negotiations" with the electric utility. The cell-tower land site was approved first, obviating the need for the utility's poles. But the utility's intransigence delayed our service enhancements and resulted in new tower construction and other inefficiencies. Perhaps more important, there are (and will continue to be) situations where new structures will not be approved within commercially reasonable or federally mandated timeframes.

17. It is my strong view that Niagara Mohawk poles and other electric-company facilities are critical to the continued development of mobile services, including mobile broadband. The fact that T-Mobile has not succeeded in attaching to a single utility pole in New York, despite years of effort, and despite the fact that there are Commission requirements for just, reasonable and nondiscriminatory pole access is difficult to understand.

18. The extent of electric companies' disregard for the needs of communications providers I believe is remarkable. While I understand that this declaration is to provide the Commission with information regarding wireless attachments to distribution poles, information regarding some utilities' disregard for the needs of mobile providers who facilities are on electric transmission facilities is also telling.

19. As part of my job responsibilities at T-Mobile, I participate in the Commission's review and approval of upgrades to existing equipment attached to utility transmission facilities. The Commission's process for important technology upgrades within existing footprints has produced many benefits to consumers and the public-safety community which must rely on wireless service.

20. Over the past several years, T-Mobile has spent considerable time and effort engaging the Commission to identify a predictable process to merely upgrade dozens of existing transmission

sites. According to Commission orders, each investor-owned electric corporation is required to obtain approval for transfer of the right to occupy space on or near transmission structures for wireless facilities pursuant to Public Service Law §70. Case 09-M-0676: *Petition of Orange and Rockland Utilities, Inc. and T-Mobile Northeast LLC for Approval Pursuant to Section 70 of the PSL for Authorization for T-Mobile's Existing Wireless Equipment Attached to Orange & Rockland's Electric Transmission Facilities (Tower 54)*, Order Granting Petitions (January 22, 2014), p. 2. Each utility already has in place Commission approved standard procedures to ensure that each wireless attachment petitions satisfy legal, environmental and engineering requirements to ensure the safety and reliability of the utility's system. Despite submitting joint petitions with Consolidated Edison and Orange and Rockland Utilities in accordance with these standard procedures, it took nearly five years of engaging and interacting with Commission Staff until approvals were eventually negotiated and adopted to enable the critical upgrades to our existing facilities and services. *See, e.g., Id.* T-Mobile continues to have additional sites requiring upgrades due to technology advancements; and, remains concerned that the Commission's undefined and costly process will further hinder those critical upgrades.

21. T-Mobile continues to also be concerned about the lack of cooperation in the Commission process by the electric utilities themselves -- who contractually committed to reasonably support the attachment of these facilities to their transmission infrastructure. While we appreciate that electric services are critical and electric transmission facilities are extremely dangerous -- in my view, many New York electric utilities, including Con Edison, do not and will not without pro-active regulation and enforcement, engage in a Commission process ensuring that we can continue to deliver critical communications services. There are also increasing examples where electric utilities are demanding unreasonable rates, revised and new terms to further limit access and necessary upgrades to existing facilities. Without that recognition, and without the reasonable

access to support critical technology upgrades, wireless and broadband deployment will be hampered in the State of New York.

22. T-Mobile has had far more success in neighboring states. For example, T-Mobile has been able to reach satisfactory arrangements with utilities located in Massachusetts, and other states, such as Maryland, Michigan, Utah, Florida, California and Virginia. Simply put, if deployments in other states can be made more quickly and less expensively than they can in New York, T-Mobile will invest elsewhere. This obviously would be harmful to our efforts to deploy advanced communications technologies and services, including 5G, in New York.

23. Siting wireless facilities is increasingly challenging and requires more complex or intricate development plans in order to meet the coverage and capacity objectives requested by our customers. It is my belief that without the requested regulatory intervention filed by CTIA regarding wireless pole attachments, T-Mobile and other wireless carriers will continue to be at a significant disadvantage in supporting the current and future advanced telecommunications needs of its customers who rely on their wireless service.

I declare that the foregoing statement is true and correct to the best of my information and belief.

July 29, 2016

Kevin Griswold
Senior Director, Northeast
Engineering & Development
T-Mobile Northeast LLC

ATTACHMENT B

BEFORE THE
NEW YORK PUBLIC SERVICE COMMISSION

In re Proceeding to Update and Clarify Wireless Pole Attachment Protections	**Docket No. 16-M-0330**

DECLARATION OF CELLCO PARTNERSHIP D/B/A VERIZON WIRELESS

1. My name is Randall C. Wilson, Senior Manager Project Implementation at Cellco Partnership d/b/a Verizon Wireless ("Verizon Wireless"). I have worked for Verizon Wireless for 15 years.

2. In my current position, I am responsible for siting wireless facilities throughout the upstate New York State region, including as pole attachments on utility poles. My responsibilities include overseeing negotiation of pole attachment agreements with utility companies. The upstate region consists of 52 counties north of and including Orange and Dutchess counties.

3. Verizon Wireless has been attempting for 28 months to obtain a wireless pole attachment agreement with the owner of several electric utilities ("Utility Owner") in the upstate region.

4. The Utility Owner initially agreed to documents that were finalized and ready for execution in late 2014.

5. In January 2015, the Utility Owner stated it had internal concerns about wireless attachments.

6. At this time, the Utility Owner is still reviewing the attachment agreement, which appears to include requirements that are stricter than the current National Electric Safety Code.

7. Another electric utility has imposed overly-restrictive design standards that render many of its poles unusable by only allowing wireless attachments in the communications space, even on poles without primary power, and prohibiting wireless attachments on poles where they would otherwise be allowed by the electrical code if they contain any of the following: regulators; transformers; reclosers; risers; switches capacitors; primary meters; terminals; traffic control equipment; load coil cases; apparatus cases; mounted CATV amplifiers or power supply; c-truss installation, or fiberglass repair sleeves.

I declare that the foregoing statement is true and correct to the best of my information and belief.

July 20, 2016

Randall C. Wilson
Senior Manager Project
Implementation
Cellco Partnership d/b/a Verizon
Wireless

ATTACHMENT C

BEFORE THE
NEW YORK PUBLIC SERVICE COMMISSION

In re Proceeding to Update and Clarify Wireless Pole Attachment Protections

Docket No. 16-M-0330

DECLARATION OF DANIELLE PETTI, SPRINT CORP.

1. My name is _Danielle Petti_ and my position at Sprint is Director Site Development NE Region. I have been employed by Sprint for 13 years, including 2 years in my current position. My job responsibilities include oversight and management of network site development in the North East Region. In this capacity, I have personal knowledge of the facts herein to which I am attesting.

2. As part of my job responsibilities at Sprint, I have been involved in the approval process for wireless pole attachments under the New York Public Service Commission's ("NYPSC" or "Commission") procedures applicable to wireless attachments to existing utility transmission facilities. In Sprint's experience, the post-application approval process is insufficient and results in unnecessary and unreasonable delays. For example, Sprint has at least one pole attachment petition that has been pending before the Commission since 2009.[1]

3. In Sprint's experience, the responsibilities of wireless pole attachers include, among other things, submission of a comprehensive proposed equipment plan, title reports, structural analysis relative to the cost estimates and payment to the utility for charges incurred in connection with license application, and certification of regulatory and municipal approvals.

---

[1] *See, e.g.,* Case 09-M-0652; *Joint Petition of Consolidated Edison Company of New York, Inc. and Sprint Spectrum L.P. for Authorization of Sprint's Existing Wireless Equipment to be Attached to Con Edison's Electric Transmission Facilities (Tower E-52),* Petition (Filed March 16, 2009).

Upon submission of this information to the utility that owns the transmission facility, the utility files a petition with the NYPSC for approval of the wireless attachments.

4. In Sprint's experience, as part of the NYPSC's review process, Commission Staff makes a site visit to the location of the pole upon which wireless attachments are proposed. Staff then generates a "punch-list" of remedial measures required at the site. Such remedial measures include, but are not limited to, verifying that the ice bridge height is sufficient to deter access to the equipment enclosure, sign and lock replacement, and removal of overgrown shrubbery. The punch-list is then provided to the utility and the wireless attacher.

5. In Sprint's experience, there is no limit to the time in which Commission Staff must make an initial site visit and provide a punch-list. Further, evidence of completion of the remediation conducted by the wireless attacher is generally provided to the utility for submission to the NYPSC, as there is no mechanism for the wireless attacher to provide such documentation directly to the NYPSC. There is also no time limit in which the utility must forward this information to Commission staff, and frequently the turnaround time is substantial. This often results in significant unnecessary delays. Sprint contends that the post-application review and approval process should be modified and streamlined in order to eliminate such unnecessary delays. Evidence of completion of remediation measures should be provided directly to Commission Staff by the wireless attacher with a copy of the utility.

6. In addition, the Commission should allow "conditional" approval of applications; i.e. approval of the application subject to conditions that any remaining remedial work be conducted within a specified time after issuance of the order approving the application.

I declare that the foregoing statement is true and correct to the best of my information and belief.

July 21, 2016

Danielle Petti

Danielle Petti
Director Site Development NE Region
Sprint Corp.

JENNIFER L GALLO
ID # 2442476
NOTARY PUBLIC
STATE OF NEW JERSEY
My Commission Expires Jan. 28, 2019

Jennifer L Gallo
7/21/16

ATTACHMENT D

BEFORE THE
NEW YORK PUBLIC SERVICE COMMISSION

In re Proceeding to Update and Clarify
Wireless Pole Attachment Protections

Docket No. 16-M-0330

DECLARATION OF RYAN TIDWELL, AT&T SERVICES, INC.

1. I am Ryan Tidwell, Director of Construction and Engineering, AT&T Services Inc. ("AT&T).

2. As AT&T continues to roll out new and improved services across the United States it will continue to rely on a variety of technologies, including small cells. Small cells can be installed on a number of support structures, including utility distribution poles.

3. In New York as well as in other states, utility poles are an important part of AT&T's plans to enhance its mobile broadband and other services, including 5G services. Utility pole access – on reasonable rates, terms and conditions (all within commercially reasonable timeframes) – is critical to the advancement of AT&T's wireless networks and technology, including of 5G technology. To the extent that these critical pole assets are not available for attachment of small-cell facilities on reasonable terms, the continued development of 5G, mobile broadband and other enhanced services will be impaired. Investment resources for small-cell infrastructure deployment could be directed to jurisdictions where such efficient and reasonable access is available.

I declare that the foregoing statement is true and correct to the best of my information and belief.

August 1, 2016

Ryan Tidwell
Director C&E- Program Office
AT&T Services Inc.

ATTACHMENT E

BEFORE THE
ARKANSAS PUBLIC SERVICE COMMISSION

IN THE MATTER	)	
OF A RULEMAKING PROCEEDING	)	
TO CONSIDER CHANGES TO THE	)	**DOCKET NO. 15-019-R**
ARKANSAS PUBLIC SERVICE COMMISSION'S	)	
POLE ATTACHMENT RULES	)	

EXPERT REPORT OF DAVID J. MARNE

Table of Contents

Photos

Attachments

Purpose and Introduction

1. The purpose of this report is to address the NESC Rules for pole top communication antenna "wireless" attachments and provide information on accepted good industry practice related to pole top communication antenna installations. Communication antennas can be installed in the pole top position on a power pole in a safe and reliable manner using the applicable National Electrical Safety Code (NESC) Rules and accepted good industry practice. This report has been written on behalf of CTIA – The Wireless Association. The intent of this report is to share industry standards and practices related to pole top communication antenna installations and to convey the positive results of applying the industry standards and practices.

Qualifications

2. I am a registered professional electrical engineer and I am the company president of Marne and Associates, Inc., an engineering consulting and training firm. I am the author of McGraw-Hill's National Electrical Safety Code (NESC) Handbook and I am a nationally recognized speaker on the NESC. I serve on NESC Subcommittee 4 Overhead Lines Clearances, Subcommittee 7 Underground Lines, Subcommittee 3 Electrical Supply Stations, and the Interpretations Subcommittee. I specialize in National Electrical Safety Code (NESC) training, OSHA training for power and communication workers, engineering design training, expert witness services related to the NESC, and the OSHA Standards for power and communication workers. I have 32 years of experience in the utility industry engineering and managing transmission and distribution line projects, substation projects, electrical system planning studies, joint-use (power and communication) projects, and providing training and expert witness services. Attached is my Curriculum Vitae (Attachment A).

Wireless Attachments

3. I have consulted with both electric power utility companies and wireless communication companies regarding the safe installations of pole top antennas. I started this type of consulting work 10 years ago. When I first started, several electric utilities resisted the idea of pole top antennas as this concept was foreign to them. My consulting work related to this issue was to educate both the wireless "attachers" and the electric utilities in the application of the already existing NESC Rules for pole top communication antenna installations. I used the NESC Code

itself and illustrations and photos in my Handbook (McGraw-Hill's National Electrical Safety Code (NESC) Handbook) as education training aids.

4. Since starting this work 10 years ago, my work has gotten easier as the number of pole top communication antenna installations have increased and more and more electric utilities have come to accept that pole top communication antennas are commonplace in the industry.

5. Today, for many electric utilities, installing a communications antenna in the supply (power) space at the pole top position has become a routine part of their standard practice due to increased deployments. These utilities apply the NESC Rules applicable to pole top communication antenna installations combined with accepted good industry practice. These utilities have updated their standard drawings and specifications to provide information for wireless companies to use when applying for and installing pole top communication antennas. These electric utilities have recognized that the need for wireless communication companies to install pole top antennas is part of a modern communications system, and they have responded to that need. There are still some electric utilities that continue to resist this change in the utility industry. Many times, this results in a dispute between the power utility and the communication carrier when a request to install a pole top antenna is made. The National Electrical Safety Code (NESC) provides Rules for the safe installation of pole top communication antennas, including clearance Rules (distance between the pole top antenna and the power line) and strength and loading Rules (ice and wind loads). With these safety Rules in place and years of successful industry installations, electric utilities should not be denying pole top communication antenna attachments.

NESC Rules

General

6. Prior to discussing the applicable National Electrical Safety Code (NESC) Rules, it is important to note how the NESC Rules are written and who serves on the NESC committees. The NESC committee members are not paid; they are volunteer members that represent various organizations including electric utility organizations, communication utility organizations, engineers, contractors, trade unions, and safety organizations. Anyone can propose an addition, deletion, or change to an NESC Rule. The change proposal is reviewed and voted on by the appropriate NESC committee, released for public comment, then reviewed and voted on

again after the public comment period. This process is done in accordance with the procedures of the American National Standards Institute (ANSI). The NESC applies to both power and communication utilities including wireless communication carriers. The current edition of the NESC is the 2012 edition. The NESC is revised on a 5 year cycle. Below are summaries of the current NESC Rules that apply to communication antenna pole top installations on distribution and transmission pole. Attached are copies of NESC Rules 222, 235I, 239H, title pages from NESC Sections 24, 25, 26, and NESC Rule 420Q (Attachment B).

Arkansas Standards

7. The State of Arkansas requires the use of the current edition of the National Electrical Safety Code (NESC) according to the "NESC Adoption Report" based on survey information collected from U.S. Regulatory Commissions. The NESC contains Rules for the safe installation of pole top antennas. Attached is a copy of the NESC Adoption Report showing that Arkansas applies the most current edition of the NESC (Attachment C).

NESC Rule 222, Joint-use of Structures

8. This Rule encourages the consideration of joint-use structures (poles and towers). This Rule focuses on joint-use of power and communication lines, realizing that duplicate poles may not be in the best interest of the utilities or the public. This Rule should be applied to joint-use of communication antennas and power poles. This Rule requires "cooperative consideration of all the factors involved." Cooperative consideration is used when a wireless "attacher" seeks to install a pole top communications antenna. Communication antennas can be installed in the communication space (next to the phone, cable television, and fiber optic lines on the pole) or in the supply space (at the pole top position). The wireless "attacher" typically desires the pole top position due to the improved coverage area it offers. Also, due to efficiencies and visual aesthetics, some municipalities favor pole top installations on existing power poles over adding additional poles for the support of wireless antennas. Per the NESC, installing a wireless antenna in the supply space must be done by a qualified power lineman, not a communication lineman. Since many wireless companies do not hire power lineman, the wireless communication company will contract with the electric utility or the electric utility's' qualified

contractor to perform the installation and maintenance work in the supply space. The typical supply (power) and communication spaces on a pole are shown in the photo below.

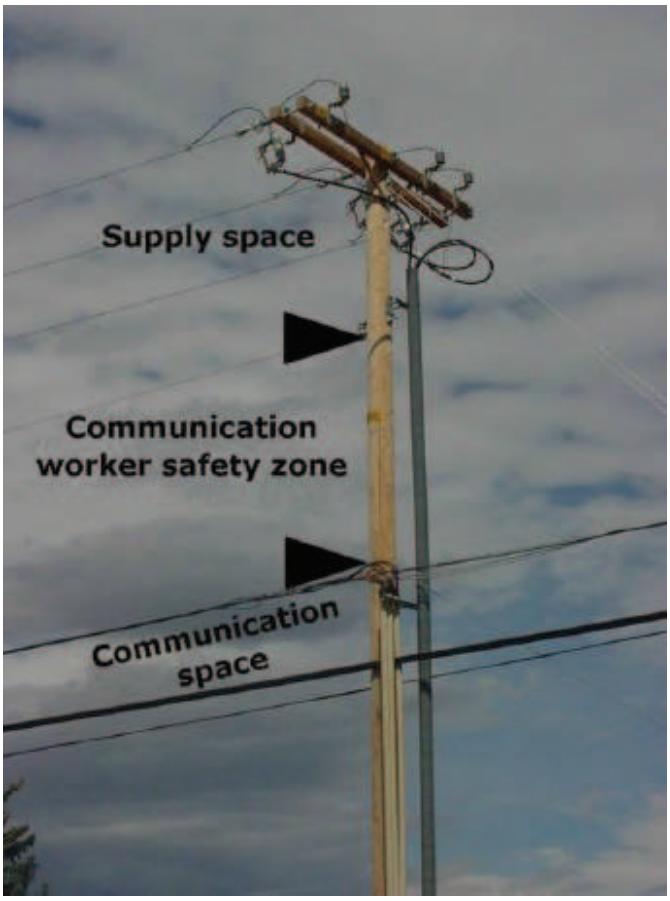

Supply (power) space, communication worker safety zone, and communication space on a typical joint-use pole.

9. An example of a communication antenna installed in the supply (power) space on a 115 kV transmission line in shown in the photo below.

Application of NESC Rules and accepted good industry practice to mount a communications pole top antenna on a 115 kV transmission line.

10. An example of a communication antenna installed in the supply (power) space on a 12.47/7.2 kV distribution line is shown in the photo below.

Application of NESC Rules and accepted good industry practice to mount a communications pole top antenna on a 12.47/7.2 kV distribution line.

NESC Rule 235I, Clearances in any direction from supply line conductors to communication antennas in the supply space attached to the same supporting structure

11. This Rule is notably the most frequently referenced Rule in the National Electrical Safety Code (NESC) with respect to pole top communication antennas as this Rule was written specifically for their installation. This Rule is used in conjunction with other NESC Rules. An example of how to apply this Rule is shown in Figure 235-22 in McGraw-Hill's National Electrical Safety Code (NESC) 2012 Handbook on page 273, which is reproduced below.

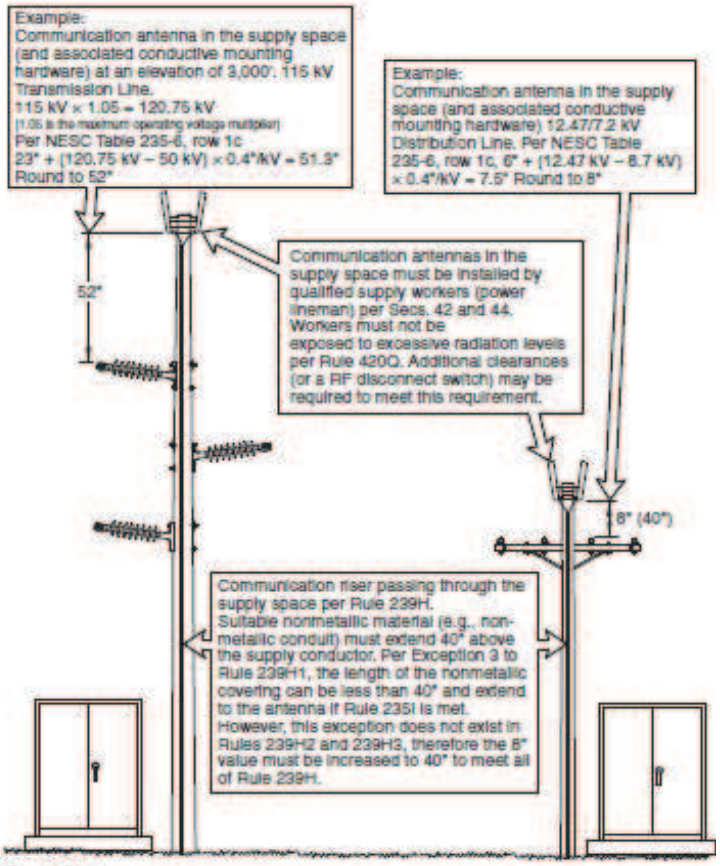

Fig. 235-22. Examples of clearance between supply lines and communication antennas in the supply space (Rule 235I).

NESC Rule 239H, Requirements for vertical communication conductors passing through supply space on jointly used structures

12. This Rule addresses the safe installation practice for the connection (conduit and wire) between the communications antenna in the pole top position and the communications equipment near or at the base of the pole.

NESC Sections 24, 25, and 26, Grades of Construction, Loadings for Grades B and C, and Strength Requirements

13. These Sections (multiple rules) address the safe installation practices related to ice and wind loads on lines and equipment. The National Electrical Safety Code (NESC) Rules in these sections are applicable to electric power lines and electric power equipment as well as communications lines and communications equipment (including antennas). In many cases, the pole top conductor on a power pole (energized phase or grounded static) has more weight and a larger wind surface area (when considering the wind span length and weight span length) than a pole top antenna. The NESC Rules in these sections protect the general public from falling energized lines and equipment, and from falling communication line and equipment. The grade of construction (or degree of safety factor) is higher for energized lines and equipment compared to communication lines and equipment due to the higher danger that energized lines impose. However, when communication lines and equipment are attached to power poles, the NESC require that the communication lines and equipment be attached using the same grade of construction (safety factor) as the energized lines.

NESC Rule 420Q, Communication Antennas

14. NESC Rule 420Q addresses worker exposure to radio frequencies. The wireless “attacher” typically performs radio frequency (RF) calculations to comply with NESC Rule 420Q. This issue is addressed in some cases with RF warning signs and RF disconnect switches and in some cases by adding additional clearance (distance) between the pole top antenna and the power line below.

Industry Practice

General

15. In addition to meeting the applicable safety Rules in the NESC for installing pole top communication antennas on power poles, industry standard practices have evolved. Below is a summary of typical industry practice issues that apply to communication antenna pole top

installations on distribution and transmission poles, and how many electric utilities have applied these accepted good industry practices to deal with the issues.

Lightning Issues

16. Lightning issues can be resolved by grounding and bonding per the National Electrical Safety Code (NESC) and the National Electrical Code (NEC). Electric utilities use the NEC for accepted good practice as the NEC applies to building wiring systems. The NEC contains rules and information on grounding, bonding, and surge arrestors for antenna systems. Basic impulse levels (BIL) related to lightning and overvoltage can be resolved using surge arrestors and/or higher voltage insulators. Where a lightning protection static or shield wire exists, the antenna can be mounted above the level of the lightning protection or shield wire and properly grounded, bonded, and surge protected.

Antenna Supports and Mounting Hardware

17. The antenna supports and mounting hardware require the same strength and loading analysis (NESC Sections 24, 25 and 26) as the power line hardware. The same type of mounting bolts and brackets used to support power line insulators and equipment are typically used to support the communications antenna. An example of a double circuit power line is shown in the photo below. The strength and loading issues of mounting the top circuit above the bottom circuit of a power line are typically far in excess of mounting a communications antenna above the bottom circuit of a power line.

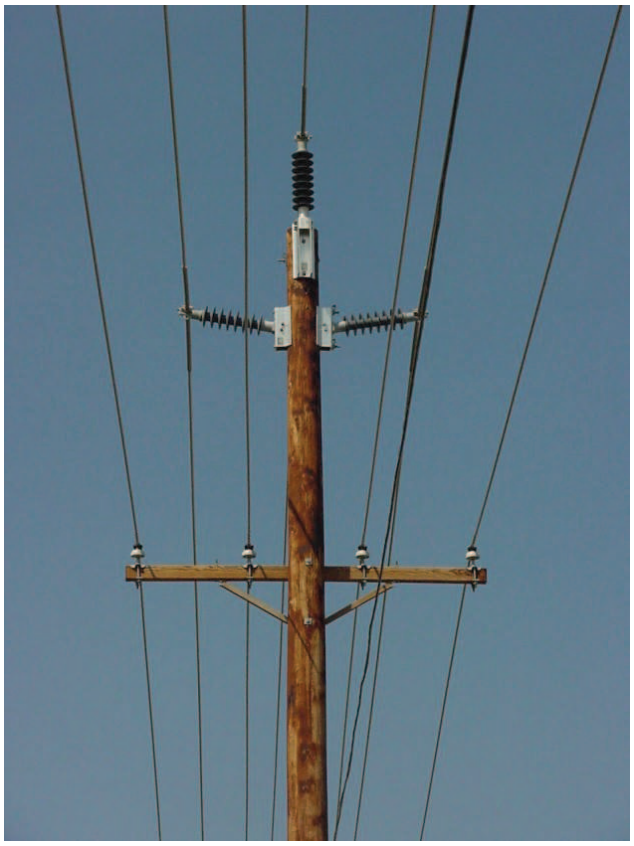

Photo of a double circuit power line. The same strength and loading (ice and wind load) analysis and the same attachment hardware (nuts and bolts) used to mount the top circuit above the bottom circuit can be used to mount a communications antenna above the bottom circuit.

Live Line Work (Hot Work)

18. The safety rules for working around energized (live or hot) conductors are provided in Part 4 of the National Electrical Safety Code (NESC) and in OSHA Standard 1910.269. A grounded transformer case, a grounded lightning arrestor, a grounded static wire, and even a grounded steel pole are common examples of grounded equipment in close proximity to energized power facilities. The same work rules used to work safely on an energized power line in the vicinity of grounded power line equipment are used to work around the communications antenna. An example of electric utility equipment near the energized power line is shown in the photo below. The same work practices used by a power lineman to work around this equipment are used to work around a pole top antenna.

Photo of a power pole with a fused cutout, grounded transformer, and street light. The same safe work practices that a power lineman uses to work on the power line adjacent to this equipment are used to work on a power line adjacent to a pole top antenna.

Reliability Issues

19. The need for electric power utilities to have high reliability (reduced outage time) is also true for wireless communication companies. Public tolerance for loss of power and loss of wireless communication is low. Building both the electric power facilities and the wireless communication facilities to meet or exceed National Electrical Safety Code (NECSC) Rules, particularly the NESC strength and loading rules, will minimize outage times for both utilities.

Pole Climbing Issues

20. OSHA Standard 1910.269, which applies to power linemen, contains a change in fall protection requirements which took effect April 1, 2015. In simple terms, the change states that a power lineman can no longer “free climb” a pole. The next edition of the National Electrical Safety Code (NESC) (2017 edition) will contain similar wording to the OSHA Standard. The practical solution to this issue when climbing a wood pole is to use a product similar to the

Buckingham BuckSqueeze. This product "clamps" around the pole as the lineman climbs the pole. The OSHA rules for climbing a wood pole do not apply when a bucket truck is used. When pole climbing issues arise, the power utility and communication carrier have to work together to resolve fall protection issues by determining reasonable equipment enclosure sizes to be mounted on the pole (typically near the base of the pole) and by using standoff brackets or an equipment rail for oversized equipment attachments.

Application and Installation Process

21. The purpose of this report does not include the application process or rental fee issues associated with installing pole top antennas. That being said, my observations of this process are positive. Unauthorized attachments have not been an issue in the pole top antenna attachment application process. The wireless "attachers" I have worked with are sophisticated and knowledgeable of the National Electrical Safety Code (NESC) Rules and industry practices related to pole top antenna installations. They have a desire to make safe and reliable attachments, and use that reputation as a tool for working with future electric utilities. Electric utilities appreciate that reputation as it builds confidence in the permitting of pole top antenna attachments. I have seen cooperation by both the wireless "attacher" and the electric utility from the start of the permit application to the end of construction and on into maintenance. Many times I have seen the wireless "attacher" build a mockup of a typical installation in the electric utility's pole yard to give an electric utility that has not previously worked with pole top antenna installation a level of comfort prior to executing the full build. Efforts like this are not required by regulation; they are done to develop a cooperative approach to modern joint-use construction. Modern joint-use agreements (contracts between a power utility and a communication carrier) are now addressing communication antenna installations.

Summary

22. The NESC pole top communication antenna rules (NESC Rule 235I) were introduced in the 2002 edition of the NESC which was published on August 1, 2001. Electric utilities that deny applications for pole top communication antennas on distribution and transmission poles are ignoring the safety rules in place and ignoring the accepted good practice in the industry regarding such installations. It is my opinion that communication antennas can be installed in

the pole top position on a power pole in a safe and reliable manner using the applicable National Electrical Safety Code (NESC) Rules and accepted good industry practice.

Attachment A

Curriculum Vitae of David J. Marne, P.E.

David J. Marne, P.E.

Marne and Associates, Inc.
619 S.W. Higgins Ave., Suite C
Missoula, MT 59803
Phone: (406) 544-8997
Fax: (406) 549-8952
Email: davem@marneassociates.com
Web: www.marneassociates.com

David J. Marne, P.E.

David J. Marne, P.E. is a registered professional electrical engineer. Mr. Marne is the author of *McGraw-Hill's National Electrical Safety Code® (NESC®) Handbook* and is a nationally recognized speaker on the NESC®. He serves on NESC® Subcommittee 4 Overhead Lines Clearances, Subcommittee 7 Underground Lines, Subcommittee 3 Electric Supply Stations, and the Interpretations Subcommittee. He is company president and senior electrical engineer for Marne and Associates, Inc. in Missoula, Montana where he specializes in National Electrical Safety Code® (NESC®) training, OSHA training for power and communication workers, engineering design training, and expert witness services related to the NESC®, the OSHA Standards for Power and Communication workers, and California's General Order 95, 128, and 165. Mr. Marne has over 32 years of experience in the utility industry engineering and managing transmission and distribution line projects, substation projects, electrical system planning studies, joint use (power and communication) projects, and providing training and expert witness services.

The 2012 National Electrical Safety Code® (NESC®) (above left) and McGraw-Hill's NESC® Handbook authored by David J. Marne, PE (above right)

Education

Montana State University, Bozeman, Montana
Bachelor of Science in Electrical Engineering (BSEE)
Graduation Date: June 1983

Various Continuing Education Courses, 1983-present
Transmission and Distribution Line Design and Staking, Substation Design, System Protection and Coordination, System Over-voltage Design, Engineering and Operations Conferences, Pole Conferences, Joint Use (Power and Communications) Conferences, Electromagnetic Fields (EMF), Corrosion Control, Project Management, Finance and Accounting, OSHA Compliance and Workplace Safety, OSHA 1910.269 Qualified Worker, National Electrical Safety Code® (NESC®) Sub-Committee Meetings, and California General Order 95 (GO95) Rule Making Sessions.

Experience

Transmission and Distribution Line Engineering

Responsible for the engineering management and/or engineering design of over 40 transmission line related projects and over 225 distribution line related projects. Projects have involved a variety of voltage levels, conductor sizes, structure types, terrain types, right-of-way constraints, and environmental issues. Designs for transmission and distribution lines include both overhead and underground circuits (including underwater locations) in both urban and rural settings. Engineering services provided for transmission and distribution engineering projects include planning, cost estimating, design, bidding, construction administration, construction observation, right-of-way, and permitting.

Substation Engineering

Responsible for the engineering management and/or engineering design of over 60 substation related projects. Projects have involved a variety of voltage levels, transformer ratings, bus sizes, structure types, site plans, grounding issues, protection schemes, metering types, communication systems, ownership, and environmental issues. Designs for substations include both live front and dead front equipment in both urban and rural settings. Engineering services for substation projects include planning, cost estimating, design, bidding, construction administration, construction observation, site work, and permitting.

Electrical System Planning Studies

Responsible for the engineering management and/or engineering design of over 95 electrical system planning related studies. Projects have involved a variety of studies including long range plans, construction work plans, sectionalizing and coordination studies, voltage drop studies, fault current studies, motor starting studies, power factor analysis, electromagnetic field (EMF) reports, and environmental studies.

Joint Use (Power and Communication) Engineering

Responsible for the engineering management and/or engineering design of over 25 joint use (power and communication) related projects. Projects have involved a variety of power line voltage levels and communication line (phone, CATV, fiber) cable types. Engineering services include calculating and reviewing clearance, and strength and loading issues in accordance with the National Electrical Safety Code® (NESC®) and Joint Use Agreements. Services also include field data gathering, determining make-ready requirements, and field construction observation.

National Electrical Safety Code® (NESC®), OSHA, and California's GO95

Nationally recognized expert on the National Electrical Safety Code® (NESC®). Author of *McGraw-Hill's NESC® Handbook* and presenter of NESC® seminars around the United States. Expert in the Occupational Safety and Health (OSHA) Standards that apply to power and communication utilities including OSHA Standards 1910.269, 1910.268, and 1926.950 through 1926.960. Expert in the California General Orders related to the electrical power and communication utility industries (GO95, GO128, and GO165). Expert in the National Electrical Code® (NEC®) rules that relate to the utility service point. (See Publications and Presentations for additional information.)

Expert Witness Services

Expert witness services and electrical investigations for cases involving power line contacts, electrocution, pole strength and loading, guy wire contacts, lineman work rules, roadway clearances, building clearances, power failure, fires, and electrical service failures resulting in loss of life, injury, and/or property damage. Electrical investigations related to power theft and stray voltage complaints. Electrical investigations related to electromagnetic field (EMF) concerns. Services for defense and plaintiff attorneys and insurance companies. (Expert witness testimony list provided separately).

Management Experience

President and CEO of Marne and Associates, Inc. Responsible for all aspects of corporate management and company direction.

Branch Manager of SSR Engineers, Inc., Missoula, Montana office. Responsibilities included administration, marketing, and engineering. Reported directly to the company president of an 80+ employee firm spread across five offices. Elected to SSR Engineers, Inc. Board of Directors in 1998 and served as a trustee on the Board of Directors until SSR Engineers was purchased by HDR Engineering in 2003.

Department Manager of the Transmission and Distribution (T&D) group of HDR Engineering in Missoula, Montana. Similar management duties as described above in addition to maintaining relationships with other managers and corporate personnel throughout a 3200+ employee firm with over 80 offices.

Work History

Marne and Associates, Inc.

Missoula, Montana 2005-Present
President
President of Marne and Associates, Inc. which provides National Electrical Safety Code® (NESC®) training (public seminars, in-house seminars, and web based training), OSHA training, training aids (software, books, manuals, etc.), accident investigation, expert witness services, and engineering design.

HDR Engineering, Inc.

Missoula, Montana 2003-2005
Transmission and Distribution Department Manager/Senior Electrical Engineer
(HDR Engineering purchased SSR Engineers on 8/1/03)

Department manager and senior electrical engineer in charge of electrical engineering design for electric utility clients and National Electrical Safety Code® (NESC®) presentations.

SSR Engineers, Inc.

Missoula, Montana 1988-2003

Branch Manager/Senior Electrical Engineer

Branch manager and senior electrical engineer in charge of electrical engineering design for electric utility clients and National Electrical Safety Code® (NESC®) presentations.

Project Engineer 1988-1990

(SSR Engineers purchased General Engineers on 3/1/88)

Project electrical engineer involved with electrical power, lighting, and communication projects for utility, industrial, and commercial clients.

General Engineers, Inc.

Missoula, Montana 1985-1988

Design Engineer

Design electrical engineer involved with electrical power, lighting, and communication projects for utility, industrial, and commercial clients.

Mare Island Naval Shipyard

Vallejo, California 1983-1985
Design Engineer
Design electrical engineer involved with electrical power, lighting, and communication projects for the public works department of a naval shipyard.

Presentations

- Applying the National Electrical Safety Code® (NESC®) to Day-to-Day Utility Work
  Presented at various utility companies and utility associations across the United States.
- Applying the National Electrical Safety Code® (NESC®) to Day-to-Day Utility Work – Transmission Voltage Focus
  Presented at various utility companies across the United States.
- Applying the National Electrical Safety Code® (NESC®) to Day-to-Day Utility Work – Substation Focus
  Presented web seminar for utility company substation department.
- National Electrical Safety Code® (NESC®) Rules for Joint Use Construction
  Presented at various utility companies and utility associations across the United States.
- Major Changes and General Overview of the 2012 National Electrical Safety Code® (NESC®)
  Presented at various utility companies and utility associations across the United States.
- Major Changes and General Overview of the 2007 National Electrical Safety Code® (NESC®)
  Presented at various utility companies and utility associations across the United States.
- Major Changes and General Overview of the 2002 National Electrical Safety Code® (NESC®)
  Presented at various utility companies and utility associations across the United States.
- Major Changes and General Overview of the 1997 National Electrical Safety Code® (NESC®)
  Presented at various utility companies and utility associations around the northwest.
- OSHA 1910.269: Electric Power Generation, Transmission and Distribution
  Presented web seminars and provided eLearning for various utility companies across the US.
- OSHA 1910.268: Telecommunications
  Presented web seminars and provided eLearning for various utility companies across the US.
- Distribution Line Design
  Presented web seminars and developed eLearning for various utility companies across the US.
- Arc Flash Hazards and Arc Rated Clothing
  Presented web seminars and developed eLearning for various utility companies across the US.
- NESC and OSHA Rules for Street Light and Traffic Signal Workers (A custom seminar consisting of approximately ½ day of NESC Rules and ½ day of OSHA 1910.269 power lineman standards.)

  Presented for the City of Portland and the City of Seattle.
- CA GO95
  Presentation at California Public Utilities Commission rule making session in San Francisco, CA.
- CA GO95 and the NESC
  Presentation at Western Energy Institute conference in Long Beach, CA and for various in-house classes.

Publications

Marne, David J., *McGraw-Hill's National Electrical Safety Code® (NESC®) 2012 Handbook*, Conforms to the 2012 NESC®, McGraw-Hill Publishing, New York, NY

Marne, David J., *McGraw-Hill's National Electrical Safety Code® (NESC®) 2007 Handbook*, Conforms to the 2007 NESC®, McGraw-Hill Publishing, New York, NY

Marne, David J., *McGraw-Hill's National Electrical Safety Code® (NESC®) 2002 Handbook*, Conforms to the 2002 NESC®, McGraw-Hill Publishing, New York, NY

National Electrical Safety Code® and NESC® are registered trademarks of the Institute of Electrical and Electronics Engineers (IEEE).

Awards

IEEE Senior Engineer Membership Award

SSR Engineers, Inc. 15 year service award

HDR Engineering, Inc. Professional Associates and Pathfinders Award

Professional Affiliations

Institute of Electrical and Electronics Engineers (IEEE), Senior Member Status

IEEE/NESC Subcommittee 1 (General), Subcommittee 3 (Electric Supply Stations), Subcommittee 4 (Overhead Lines- Clearances), Subcommittee 7 (Underground Lines), and the Interpretations Subcommittee

IEEE Power Engineering Society (PES)

National Society of Professional Engineers (NSPE)

Manager of LinkedIn NESC – Power and Communications Group

Manager of LinkedIn GO95, GO128, and GO165 Group

Licensure

Professional Engineer, State of Montana, License Number 9428PE

Professional Engineer, State of Idaho, License Number 6426

Professional Engineer, State of Washington, License Number 39601

Professional Engineer, State of Texas, License Number 1106

Professional Engineer, State of California, License Number E 20771

Professional Engineer, State of New York, License Number 095448

Attachment B

NESC Rules 222, 235I, 239H, title pages from NESC Sections 24, 25, 26, and NESC Rule 420Q

Accredited
Standards
Committee
C2-2012

National Electrical Safety Code®

Secretariat
Institute of Electrical and Electronics Engineers, Inc.

Approved 14 April 2011
Institute of Electrical and Electronics Engineers, Inc.

Approved 3 June 2011
American National Standards Institute

2012 Edition

Abstract: This Code covers basic provisions for safeguarding of persons from hazards arising from the installation, operation, or maintenance of (1) conductors and equipment in electric supply stations, and (2) overhead and underground electric supply and communication lines. It also includes work rules for the construction, maintenance, and operation of electric supply and communication lines and equipment. The Code is applicable to the systems and equipment operated by utilities, or similar systems and equipment, of an industrial establishment or complex under the control of qualified persons. This Code consists of the introduction, definitions, grounding rules, list of referenced and bibliographic documents, and Parts 1, 2, 3, and 4 of the 2012 Edition of the National Electrical Safety Code.

Keywords: communications industry safety; construction of communication lines; construction of electric supply lines; electrical safety; electric supply stations; electric utility stations; high-voltage safety; operation of communications systems; operation of electric supply systems; power station equipment; power station safety; public utility safety; safety work rules; underground communication line safety; underground electric line safety

The Institute of Electrical and Electronics Engineers, Inc.
3 Park Avenue, New York, NY 10016-5997, USA

ISBN 978-0-7381-6588-2

1 August 2011 STDPT97085

222. Joint use of structures

Joint use of structures should be considered for circuits along highways, roads, streets, and alleys. The choice between joint use of structures and separate lines shall be determined through cooperative consideration of all the factors involved, including the character of circuits, the total number and weight of conductors, tree conditions, number and location of branches and service drops, structure conflicts, availability of right-of-way, etc. Where such joint use is mutually agreed upon, it shall be subject to the appropriate grade of construction specified in Section 24.

223. Communications protective requirements

A. Where required

Where communication apparatus is handled by other than qualified persons, it shall be protected by one or more of the means listed in Rule 223B if such apparatus is permanently connected to lines subject to any of the following:

1. Lightning
2. Contact with supply conductors whose voltage to ground exceeds 300 V
3. Transient rise in ground potential exceeding 300 V
4. Steady-state induced voltage of a hazardous level

Where communication cables will be in the vicinity of supply stations where large ground currents may flow, the effect of these currents on communication circuits should be evaluated.

NOTE: Additional information may be obtained from IEEE Std 487™-2007 [B36] and IEEE Std 1590™-2003 [B54].

B. Means of protection

Where communication apparatus is required to be protected under Rule 223A, protective means adequate to withstand the voltage expected to be impressed shall be provided by insulation, protected where necessary by surge arresters used in conjunction with fusible elements. Severe conditions may require the use of additional devices such as auxiliary arresters, drainage coils, neutralizing transformers, or isolating devices.

224. Communication circuits located within the supply space and supply circuits located within the communication space

A. Communication circuits located in the supply space

1. Communication circuits located in the supply space shall be installed and maintained only by personnel authorized and qualified to work in the supply space in accordance with the applicable rules of Sections 42 and 44.
2. Communication circuits located in the supply space shall meet the following clearance requirements, as applicable:
   a. Insulated communication cables supported by an effectively grounded messenger shall have the same clearances as neutrals meeting Rule 230E1 from communication circuits located in the communication space and from supply conductors located in the supply space. See Rules 235 and 238.
   b. Fiber-optic cables located in the supply space shall meet the requirements of Rule 230F.
   c. Open-wire communication circuits permitted by other rules to be in the supply space shall have the same clearances from communication circuits located in the communication space and from other circuits located in the supply space as required by Rule 235 for ungrounded open supply conductors of 0 to 750 V.

4. If series lighting or similar supply circuits are ordinarily dead during periods of work on or above the support arm concerned

5. If the two circuits concerned are communication circuits (located in the supply space in accordance with Rule 224A), or one circuit is such a communication circuit and the other is a supply circuit of less than 8.7 kV, provided they are installed as specified in Rule 235F1 or 235F2

G. Conductor spacing: vertical racks or separate brackets

Conductors or cables may be carried on vertical racks or separate brackets other than wood placed vertically on one side of the structure and securely attached thereto with less clearance between the wires, conductors, or cables than specified in Rule 235C if all the following conditions are met:

1. All wires, conductors, and cables are owned and maintained by the same utility, unless by agreement between all parties involved.

2. The voltage shall be not more than 750 V, except supply cables and conductors meeting Rule 230C1 or 230C2, which may carry any voltage.

3. Conductors shall be arranged so that the vertical spacing shall be not less than that specified in Table 235-8 under the conditions specified in Rule 235C2b(1)(c).

EXCEPTION 1: A supporting neutral conductor of a supply cable meeting Rule 230C3 or an effectively grounded messenger of a supply cable meeting Rule 230C1 or 230C2 may attach to the same insulator or bracket as a neutral conductor meeting Rule 230E1, so long as the clearances of Table 235-8 are maintained in mid-span and insulated energized conductors are positioned away from the open supply neutral at the attachment.

EXCEPTION 2: No mid-span clearance is required where supply cables meeting Rule 230C3 or service drops meeting Rule 234C3a are attached to the neutral conductor meeting Rule 230E1 anywhere in the span.

H. Clearance and spacing between communication conductors, cables, and equipment

1. The spacing between messengers supporting communication cables should be not less than 300 mm (12 in) except by agreement between the parties involved including the pole owner(s).

2. The clearances between the conductors, cables, and equipment of one communication utility to those of another, anywhere in the span, shall be not less than 100 mm (4 in), except by agreement between the parties involved including the pole owner(s).

I. Clearances in any direction from supply line conductors to communication antennas in the supply space attached to the same supporting structure

1. General

Communication antennas located in the supply space shall be installed and maintained only by personnel authorized and qualified to work in the supply space in accordance with the applicable rules of Sections 42 and 44. See also Rule 224A.

2. Communication antenna

The clearance between a communication antenna operated at a radio frequency of 3 kHz to 300 GHz, including any associated conductive mounting hardware, and a supply line conductor shall be not less than the value given in Table 235-6, row 1c.

NOTE 1: The antenna functions as a rigid, vertical, or lateral open wire communication conductor.

NOTE 2: Clearances shown in Table 235-6 are not intended to apply to personnel working in the vicinity of communication antennas. See Rule 420Q.

3. Equipment case that supports or is adjacent to a communication antenna

The clearance between an equipment case that supports or is adjacent to a communication antenna and a supply line conductor shall be not less than the value given in Table 235-6, row 4a.

4. Vertical or lateral communication conductors and cables attached to a communication antenna

The clearance between a supply line conductor and the vertical or lateral communication conductor and cable attached to a communication antenna shall be not less than the value given in Rule 239.

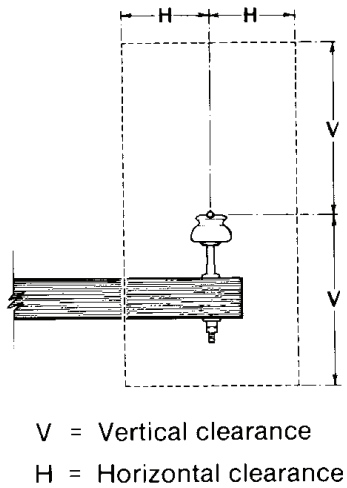

Figure 235-1—Clearance diagram for energized conductor

(b) The grounding conductor has no connection to supply equipment between the grounding electrode and the effectively grounded conductor unless the supply equipment has additional connections to the effectively grounded conductor, and

(c) The grounding conductor is bonded to grounded communication facilities at that structure.

2. Cables and conductors in conduit or covering

Cables and conductors of all voltages may be run in a nonmetallic conduit or covering or in a grounded metallic conduit or covering in accordance with Rule 239A1. Where a metallic conduit or covering is not bonded to grounded communications facilities at that structure, such metal conduit or covering shall have a nonmetallic covering from 1.0 m (40 in) above the highest communication attachment to 1.80 m (6 ft) below the lowest communication attachment.

3. Protection near trolley, ungrounded traffic signal, or ungrounded luminaire attachments

Vertical supply conductors or cables attached to the structure shall be guarded with suitable nonmetallic conduit or covering on structures that carry a trolley or ungrounded traffic signal attachment or an ungrounded luminaire that is attached below the communication cable. The cable shall be protected with nonmetallic covering from 1.0 m (40 in) above the highest communication wire to 1.80 m (6 ft) below the lowest trolley attachment or ungrounded luminaire fixture or ungrounded traffic signal attachment.

4. Aerial services

Where supply cables are used as aerial services, the point where such cables leave the structure shall be at least 1.0 m (40 in) above the highest or 1.0 m (40 in) below the lowest communication attachment. Within the communication space, all splices and connections in the energized phase conductors shall be insulated.

5. Clearance from through bolts and other metal objects

Vertical runs of supply conductors or cables shall have a clearance of not less than 50 mm (2 in) from exposed through bolts and other exposed metal objects attached thereto that are associated with communication line equipment.

EXCEPTION: Vertical runs of effectively grounded supply conductors may have a clearance of 25 mm (1 in).

H. Requirements for vertical communication conductors passing through supply space on jointly used structures

All vertical runs of communication conductors passing through supply space shall be installed as follows:

1. Metal-sheathed communication cables

Vertical runs of metal-sheathed communication cables shall be covered with suitable nonmetallic material, where they pass trolley feeders or other supply line conductors. This nonmetallic covering shall extend from a point 1.0 m (40 in) above the highest trolley feeders or other supply conductors, to a point 1.80 m (6 ft) below the lowest trolley feeders or other supply conductors, but need not extend below the top of any mechanical protection that may be provided near the ground.

EXCEPTION 1: Communication cables may be run vertically on the pole through space occupied by railroad signal supply circuits in the lower position, as permitted in Rule 220B2, without covering within the supply space.

EXCEPTION 2: Covering is not required in the supply space on metallic or concrete supporting structures.

EXCEPTION 3: Where the cable terminates at an antenna in the supply space meeting Rule 235I, the nonmetallic covering need only extend to the antenna.

2. Communication conductors

Vertical runs of insulated communication conductors shall be covered with suitable nonmetallic material, to the extent required for metal-sheathed communication cables in Rule 239H1, where such conductors pass trolley feeders or supply conductors.

EXCEPTION 1: Communication conductors may be run vertically on the structure through space occupied by railroad-signal supply circuits in the lower position, as permitted in Rule 220B2, without covering within the supply space.

EXCEPTION 2: Covering is not required in the supply space on metallic or concrete supporting structures.

3. Communication grounding conductors

Vertical communication grounding conductors shall be covered with suitable nonmetallic material between points at least 1.80 m (6 ft) below and 1.0 m (40 in) above any trolley feeders or other supply line conductors by which they pass.

EXCEPTION 1: Communication grounding conductors may be run vertically on the structure though space occupied by railroad-signal supply circuits in the lower position, as permitted in Rule 220B2, without covering within the supply space.

EXCEPTION 2: Covering is not required in the supply space on metallic or concrete supporting structures.

4. Clearance from through bolts and other metal objects

Vertical runs of communication conductors or cables shall have a clearance of one eighth of the pole circumference but not less than 50 mm (2 in) from exposed through bolts and other exposed metal objects attached thereto that are associated with supply line equipment.

EXCEPTION: Vertical runs of effectively grounded communication cables may have a clearance of 25 mm (1 in).

I. Operating rods

Effectively grounded or insulated operating rods of switches are permitted to pass through the communication space, but shall be located outside of the climbing space.

J. Additional rules for standoff brackets

1. Standoff brackets may be used to support the conduit(s). Cable insulation appropriate for the intended service is required; non-metallic conduit shall not be used to meet basic insulation requirements.

NOTE: See Rule 217A2.

2. Standoff brackets may be used to support the following types of cable enclosed within a single outer jacket or sheath (cable only without conduit):

a. Communication

b. 230C1a supply (any voltage)

c. Supply less than 750 V

NOTE: See Rule 217A2.

Section 24.
Grades of construction

240. General

A. The grades of construction are specified in this section on the basis of the required strengths for safety. Where two or more conditions define the grade of construction required, the grade used shall be the highest one required by any of the conditions.

B. For the purposes of this section, the voltage values for direct-current circuits shall be considered equivalent to the rms values for alternating-current circuits.

241. Application of grades of construction to different situations

A. Supply cables

For the purposes of these rules, supply cables are classified by two types as follows:

Type 1—Supply cables conforming to Rule 230C1, 230C2, or 230C3 shall be installed in accordance with Rule 261I.

Type 2—All other supply cables are required to have the same grade of construction as open-wire conductors of the same voltage.

B. Order of grades

The relative order of grades for supply and communication conductors and supporting structures is B, C, and N, with Grade B being the highest.

C. At crossings

Wires, conductors, or other cables of one line are considered to be at crossings when they cross over another line, whether or not on a common supporting structure, or when they cross over or overhang a railroad track, the traveled way of a limited access highway, or navigable waterways requiring waterway crossing permits. Joint-use or collinear construction in itself is not considered to be at crossings.

1. Grade of upper line

Conductors and supporting structures of a line crossing over another line shall have the grade of construction specified in Rules 241C3, 242, and 243.

2. Grade of lower line

Conductors and supporting structures of a line crossing under another line need only have the grades of construction that would be required if the line at the higher level were not there.

3. Multiple crossings

a. Where a line crosses in one span over two or more other lines, or where one line crosses over a span of a second line, which span in turn crosses a span of a third line, the grade of construction of the uppermost line shall be not less than the highest grade that would be required of either one of the lower lines when crossing the other lower line.

b. Where communication conductors cross over supply conductors and railroad tracks in the same span, the grades of construction shall be in accordance with Grade B construction. It is recommended that the placing of communication conductors above supply conductors generally be avoided unless the supply conductors are trolley-contact conductors and their associated feeders.

D. Conflicts (see Section 2, **structure conflict**)

The grade of construction of the conflicting structure shall be as required by Rule 243A4.

Section 25.
Loadings for Grades B and C

250. General loading requirements and maps

A. General

1. It is necessary to assume the wind and ice loads that may occur on a line. Three weather loadings are specified in Rules 250B, 250C, and 250D. Where all three rules apply, the required loading shall be the one that has the greatest effect.

2. Where construction or maintenance loads exceed those imposed by Rule 250A1, the assumed loadings shall be increased accordingly. When temporary loads, such as lifting of equipment, stringing operations, or a worker on a structure or its component, are to be imposed on a structure or component, the strength of the structure or component should be taken into account or other provisions should be made to limit the likelihood of adverse effects of structure or component failure.

   NOTE: Other provisions could include cranes that can support the equipment loads, guard poles and spotters with radios, and stringing equipment capable of promptly halting stringing operations.

3. It is recognized that loadings actually experienced in certain areas in each of the loading districts may be greater, or in some cases, may be less than those specified in these rules. In the absence of a detailed loading analysis, using the same respective statistical methodologies used to develop the maps in Rule 250C or 250D, no reduction in the loadings specified therein shall be made without the approval of the administrative authority.

4. The structural capacity provided by meeting the loading and strength requirements of Sections 25 and 26 provides sufficient capability to resist earthquake ground motions.

B. Combined ice and wind district loading

Four general degrees of district loading due to weather conditions are recognized and are designated as heavy, medium, light, and warm island loading. Figure 250-1 shows the districts where these loadings apply. Warm island loading applies to Hawaii and other island systems located in the range of 0 to 25 degrees latitude, north or south.

NOTE: The localities are classified in the different loading districts according to the relative simultaneous prevalence of the wind velocity and thickness of ice that accumulates on wires. Light loading is for places where little, if any, ice accumulates on wires. In the warm island loading zone, cold temperatures and ice accumulation on wires only occurs at high altitudes.

Table 250-1 shows the radial thickness of ice and the wind pressures to be used in calculating loads. Ice is assumed to weigh 913 kg/m^3 (57 lb/ft^3).

C. Extreme wind loading

If no portion of a structure or its supported facilities exceeds 18 m (60 ft) above ground or water level, the provisions of this rule are not required, except as specified in Rule 261A1c, 261A2e, or 261A3d. Where a structure or its supported facilities exceeds 18 m (60 ft) above ground or water level the structure and its supported facilities shall be designed to withstand the extreme wind load associated with the Basic Wind Speed, as specified by Figure 250-2. The wind pressures calculated shall be applied to the entire structure and supported facilities without ice. The following formula shall be used to calculate wind load.

Load in newtons $= 0.613 \cdot (V_{m/s})^2 \cdot k_z \cdot G_{RF} \cdot I \cdot C_f \cdot A(m^2)$

Load in pounds $= 0.00256 \cdot (V_{mi/h})^2 \cdot k_z \cdot G_{RF} \cdot I \cdot C_f \cdot A(ft^2)$

Section 26.
Strength requirements

260. General (see also Section 20)

A. Preliminary assumptions

1. It is recognized that deformation, deflections, or displacement of parts of the structure may change the effects of the loads assumed. In the calculation of stresses, allowance may be made for such deformation, deflection, or displacement of supporting structures including poles, towers, guys, crossarms, pins, conductor fastenings, and insulators when the effects can be evaluated. Such deformation, deflection, or displacement should be calculated using Rule 250 loads prior to application of the load factors in Rule 253. For crossings or conflicts, the calculations shall be subject to mutual agreement.

   NOTE: Depending upon the characteristics of the structural material, significant sustained (everyday) stress (such as stresses produced by gravity or tension loads) can decrease the strength during the expected life of the material and may require guying or bracing to be able to meet the required strength capability.

2. It is recognized that new materials may become available. While these materials are in the process of development, they must be tested and evaluated. Trial installations are permitted where the requirements of Rule 13A2 are met.

B. Application of strength factors

1. Supporting structures and structural components shall be designed to withstand the appropriate loads multiplied by the load factors in Section 25 without exceeding their strength multiplied by the strength factors in Table 261-1.

   EXCEPTION: For insulators, see Section 27 for strength and loading requirements.

   NOTE 1: The latest edition of the following document may be used for providing information for determining the 5% lower exclusion limit strength of a FRP structure or component for use with an appropriate strength factor (Table 261-1) and the specified NESC loads and load factors (Table 253-1): ASCE-111, Reliability-Based Design of Utility Pole Structures.

   NOTE 2: The latest edition (unless a specific edition is referenced) of the following documents are among those available for determining structure design capacity with the specified NESC loads, load factors, and strength factors:

   ANSI/ASCE-10, Design of Latticed Steel Transmission Structures

   ASCE-91, Design of Guyed Electrical Transmission Structure

   ASCE-PCI, Guide for the Design of Prestressed Concrete Poles

   ASCE-48, Design of Steel Transmission Pole Structures

   ASCE-104, Recommended Practice For Fiber-Reinforced Polymer Products For Overhead Utility Line Structures

   PCI, Design Handbook-Precast and Prestressed Concrete

   ASCE-113, Substation Structure Design Guide

   ACI-318, Building Code Requirements for Structural Concrete (for reinforced concrete designs)

   ACI-318, 1983, Building Code Requirements for Structural Concrete (for anchor bolt bond strength and design)

   IEEE Std 751™-1990, IEEE Trial-Use Design Guide for Wood Transmission Structures [B40]

   AISI, Specification for the Design of Cold-Formed Steel Structural Members

   The Aluminum Association, Aluminum Design Manual

2. Where strength factors are not defined in Rule 261, a strength factor of 0.80 shall be used for the extreme wind loading conditions specified in Rule 250C and for the extreme ice with concurrent wind specified in Rule 250D for all supported facilities.

O. Cable reels

Cable reels shall be securely blocked so they cannot roll or rotate accidentally.

P. Street and area lighting

1. The lowering rope or chain, its supports, and fastenings shall be examined periodically.
2. A suitable device shall be provided by which each lamp on series-lighting circuits of more than 300 V may be safely disconnected from the circuit before the lamp is handled.

   EXCEPTION: This rule does not apply where the lamps are always worked on from suitable insulated platforms or aerial lift devices, or handled with suitable insulated tools, and treated as under full voltage of the circuit concerned.

Q. Communication antennas

When working in the vicinity of communication antennas operating in the range of 3 kHz to 300 GHz, workers shall not be exposed to radiation levels that exceed those set forth by the regulatory authority having jurisdiction.

NOTE: See OSHA 29 CFR 1910.97, Subpart G [B67]; OSHA 29 CFR 1910.268, Subpart R [B68]; FCC Bulletin No. 65 [B32]; IEEE Std C95.1™-2005 [B61].

421. General operating routines

A. Duties of a first-level supervisor or person in charge

This individual shall:

1. Adopt such precautions as are within the individual's authority to prevent accidents.
2. See that the safety rules and operating procedures are observed by the employees under the direction of this individual.
3. Make all the necessary records and reports, as required.
4. Prevent unauthorized persons from approaching places where work is being done, as far as practical.
5. Prohibit the use of tools or devices unsuited to the work at hand or that have not been tested or inspected as required.
6. Conduct a job briefing with the employees involved before beginning each job. A job briefing should include at least the following items: work procedures, personal protective equipment requirements, energy source controls, hazards associated with the job, and special precautions.

B. Area protection

1. Areas accessible to vehicular and pedestrian traffic
   a. Before engaging in work that may endanger the public, safety signs or traffic control devices, or both, shall be placed conspicuously to alert approaching traffic. Where further protection is needed, suitable barrier guards shall be erected. Where the nature of work and traffic requires it, a person shall be stationed to warn traffic while the hazard exists.
   b. When openings or obstructions in the street, sidewalk, walkways, or on private property are being worked on or left unattended during the day, danger signals, such as safety signs and flags, shall be effectively displayed. Under these same conditions at night, warning lights shall be prominently displayed and excavations shall be enclosed with protective barricades.
2. Areas accessible to employees only
   a. If the work exposes energized or moving parts that are normally protected, safety signs shall be displayed. Suitable barricades shall be erected to restrict other personnel from entering the area.
   b. When working in one section where there is a multiplicity of such sections, such as one panel of a switchboard, one compartment of several, or one portion of a substation,

Attachment C

NESC Survey by US State, see Arkansas (AR)

Survey Information
United States Regulatory Commissions
Adoption of the
IEEE National Electrical Safety Code (NESC)

The IEEE has conducted a survey of the regulatory bodies in the United States regarding adoption of the National Electrical Safety Code. We asked the 50 state public service or regulatory commissions the following questions:

1. Does your state automatically adopt each new edition of the NESC?

2. Does your state hold a rulemaking proceeding for each new edition of the NESC?

3. If your state has specifically adopted an edition of the NESC, please indicate which one.

4. Does your state use the NESC to develop its own Code?

5. Does your state have its own Code, and does not use the NESC?

6. Other

As of Oct 2007, we have received an approximate 84% response. As more information is provided to us from the regulators, we will update this report.

While we have reflected here the information provided to us by the Commissions, we urge those seeking further accuracy of this information to contact the individual state regulatory commission to confirm this data. Information on the Commissions and how to contact them is available on the internet at http://www.naruc.org/Stateweb.htm.

NOTE: The information from this survey was compiled and distributed for informational purposes only. This information is not intended to provide an interpretation of the data received. The IEEE is not responsible for verifying the accuracy of information provided by the Commissions.

* Did not respond to survey

State	(1) New Edition Automatically Adopted	(2) Rulemaking proceeding each new code	(3) Specifically adopted this edition	(4) Uses the NESC to develop own code	(5) Has own code and does not use NESC	(6) Other
AL	Yes * (compliance with requirements at time of construction/installation; not retroactive	No	n/a	No	No	
AK	No	The Dept of labor and Workforce Development is the Authority Having Jurisdiction in Alaska and we adopt through the regulation process.	Current is the 2002 and 2007 is in the adoption process	No	No	
AZ	No	Yes	1997 Edition	No	No	
AR	Yes	No	NA	No	No	
CA	*	*	*	*	*	
CO	No	Yes	C2-2007 (for our Rules Regulating Telecommunications Providers, Services, and Products) C2-2002 (for our Rules Regulating Electric Utilities)	No	No	
CT	Yes	No		No	No	
DE	Yes. On January 10, 1952 in Order No. 103 in Regulation 58, the Delaware Public Service Commission adopted regulations for Electrical Corporations. Rule 10. b. of those regulations indicates that the Commission will use the current edition of the NESC, as well as other codes, as criteria for accepted good practice.	No	NA	No	No	
DC	No	No	NA	No	No	
FL	No	Yes	2007	No	No	
GA	No	No	NA	No	No	
HI	No	Hawaii has historically not adopted each new Code, but	2002 NESC	2002 NESC incorporated into Chapter 6-73, Hawaii	No	

State	(1) New Edition Automatically Adopted	(2) Rulemaking proceeding each new code	(3) Specifically adopted this edition	(4) Uses the NESC to develop own code	(5) Has own code and does not use NESC	(6) Other
		intends to do so beginning with the adoption of the 2002 NESC		Administrative Rules, with certain modifications		
ID	Yes	No		No	No	
IL	No	Yes	Portions of the 1997 edition and the 2002 edition depending on the application.	No	No	
IN	No. We normally adopt each new edition shortly after it is issued, but the process is not "automatic."	Yes	2002	No	No	
IA		Yes	2007			We do not adopt Part 4 of the NESC; it is considered OSHA's area.
KS	No	No X The Kansas Corporation Commission (KCC) has not adopted EACH new edition. However, as the KCC reviews new editions of the NESC, it has held rulemaking proceedings to adopt them.	1997	No	No	NESC. The 1997 edition of the NESC is adopted by reference in the Commission's Wire-Stringing Rules, K.A.R. 82-12-1 et seq. Specifically, the regulation adopting the NESC is K.A.R. 82-12-2.
KY	Yes	No	KRS 278.042 references the "most recent edition of the NESC."	Yes: KY incorporates the entire NESC as the safety standard for electric utilities. This is augmented by accepted engineering practices and utility specific safety programs.	No	
LA	No	No	No	No	No	The LPSC has not formally adopted the Code. However, all electric utilities in the state of Louisiana abide by the NESC. Additionally, the LPSC staff uses the NESC in its investigations, when necessary. We note that NARUC, to which the LPSC is a voting member, is a member of the NESC Standards Committee.

State	(1) New Edition Automatically Adopted	(2) Rulemaking proceeding each new code	(3) Specifically adopted this edition	(4) Uses the NESC to develop own code	(5) Has own code and does not use NESC	(6) Other
ME	Yes	No		No	No	
MD	Yes	No	No	No	No	For enforcement we use the NESC edition that was in effect at the time of installation. This is particularly true for clearance issues.
MA	*	*	*	*	*	
MI	No	No	1997	No	No	R 460.813 Standards of good practice; adoption by reference. Rule 3. Parts 1, 2, and 3 and sections 1, 2, 3, and 9 of the national electrical safety code, 1997 edition (ANSI-C2-1997), are adopted by reference in these rules as standards of accepted good practice. (link to ruleset) http://www.state.mi.us/orr/emi/admincode.asp?AdminCode=Single&Admin_Num=46000811&Dpt=CI&RngHigh
MN	Yes. The most current edition of the NESC is referenced in Minnesota Statutes Section 326.243.	No	Because the statute refers to the most current edition, the 2007 NESC is in effect in Minnesota.	No	No	Most work under the jurisdiction of the NESC in Minnesota is exempt from licensing and inspection requirements and therefore the NESC is mimimally referenced by the department.
MS	Yes	No		No	No	
MO	No	Yes	2002	No	No	We've adopted the 2002 NESC in our rule 4 CSR 240-18.010 at this link: { HYPERLINK "http://sos.mo.gov/adrules/csr/current/4csr/4c240-18.pdf" }
MT	No	Yes	2007	No	No	
NE	No	Yes	WE ARE IN THE PROCESS OF ADOPTING THE 2007 EDITION.	No	No	
NV	*	*	*	*	*	
NH	No	Yes	2002	No	No	
NJ	No	Yes	2007	No	No	
NM	*	*	*	*	*	
NY	Yes, our regulations require utilities to comply with the latest edition of the NESC.	No, a rule making proceeding is not required to adopt the latest edition of the code.	N/A	No	No, but New York State does have safety requirements in addition to the NESC that include stray voltage testing and mandatory facility inspections.	
NC	Yes	No		No	No	
ND	No	Yes	Last NESC	No, the	No	

State	(1) New Edition Automatically Adopted	(2) Rulemaking proceeding each new code	(3) Specifically adopted this edition	(4) Uses the NESC to develop own code	(5) Has own code and does not use NESC	(6) Other
			specifically adopted was the 2002 edition. A proceeding is underway to adopt the 2007 edition.	NESC is adopted by reference.		
OH	No	Yes	2002	No	No	
OK	*	*	*	*	*	
OR	No	Yes	2007	No	No	
PA	Yes	No		No	No	Our regulations containing the NESC: § 57.82. Installation of distribution and service lines. (a) Distribution and service lines installed under an application for electric service within a development shall be installed underground, shall conform to the utility's construction standards, § 57.26 (relating to construction and maintenance of facilities), the specifications set forth in the National Electric Safety Code (NESC), and shall be owned and maintained by the utility. Pad-mounted transformers may be installed as a utility construction standard. Excavating and backfilling shall be performed by the developer of the project or by another agent the developer may authorize. Installation of service-related utility facilities shall be performed by the utility or by another agent the utility may authorize. Street-lighting lines installed then or thereafter within the same development shall also be installed underground, upon terms and conditions prescribed elsewhere in each utility's tariff. The utility is not liable for injury or damage occasioned by the willful or negligent excavation, breakage or other interference with its underground lines occasioned by anyone other than its own employees or agents. (b) Nothing in this section shall prohibit a utility from performing its own excavating and backfilling for greater system design flexibility. No charges other than those specified in § 57.83(4) (relating to applicants for electric service) shall be permitted. Source The provisions of this § 57.82 adopted March 4, 1977, effective March 5, 1977, 7 Pa.B. 577; amended June 29, 1984, effective June 30, 1984, 14 Pa.B. 2230. Immediately preceding text appears at serial page (80639). Cross References This section cited in 52 Pa. Code § 57.19 (relating to line extensions); 52 Pa. Code § 57.88 (relating to subdivisions); and 52 Pa. Code § 69.43 (relating to notice lead-time).
RI	Yes	No		No	No	
SC	Yes	No	N/A	No	No	
SD	*	*	*	*	*	
TN	No - Legislation has to be passed to	No - The Code is adopted by	See answer to number one (1)	No - The state has	No - The state uses the	

State	(1) New Edition Automatically Adopted	(2) Rulemaking proceeding each new code	(3) Specifically adopted this edition	(4) Uses the NESC to develop own code	(5) Has own code and does not use NESC	(6) Other
	adopt a version of the NESC (See, Tenn Code Ann. Sec. 68-101-104). Tennessee has recently passed legislation which adopted the August 1, 2006 edition.	the Legislature.	above.	adopted the National Electrical Code, 2002 edition and has its own rules and regulations governing installations of electrical conductors and equipment, etc.	NESC, the NEC, and its own rules and regulations.	
TX	Yes	No	N/A	No	No	
UT	No	Yes	As currently defined in Utah Administrative Code Rule R746-310. Uniform Rules Governing Electricity Service by Electric Utilities "National Electrical Safety Code" means the 2002 edition of the National Electrical Safety Code, C2-2002, as approved by the American National Standards Institute, ISBN 0-7381-2778-7, incorporated by reference. In May the Utah Public Service Commission received a petition to update this reference to the 2007 edition. Rulemaking on this issue will be pursued once copies of the standard have been received by the Commission and are available for use. In addition, Utah Administrative Code Rule R746-310-4. Station Instruments, Voltage and Frequency	No	No	

State	(1) New Edition Automatically Adopted	(2) Rulemaking proceeding each new code	(3) Specifically adopted this edition	(4) Uses the NESC to develop own code	(5) Has own code and does not use NESC	(6) Other
			Restrictions and Station Equipment currently refers to the 1995 edition of the American National Standard for Electrical Power Systems and Equipment-Voltage Ratings (60 Hz), ANSI C84.1. In May the Utah Public Service Commission received a petition to update this reference to the 2006 edition. Rulemaking on this issue will be pursued once copies of the standard have been received by the Commission and are available for use.			
VT	Yes -- Public Service Board Rule 3.500 provides that "All construction and maintenance of electric, telephone, telegraph and cable television systems and facilities in all locations within Vermont shall conform to the standards contained in the 1981 edition of the National Electrical Safety Code or in any subsequent or revised edition thereof."	No	Public Service Board Rule 3.500 was last modified in 1983. Therefore, the Rule specifically mentions the 1981 edition of the NESC, but as stated in the Rule quoted above, each new edition is automatically adopted.	No	No	
VA	*	*	*	*	*	
WA	No	No	2002	No	No	The responses provided here are for this agency only, which has jurisdiction over the investor-owned electric utilities in Washington. The publicly-owned utilities in this state (of which there are 60) are each governed by their own

State	(1) New Edition Automatically Adopted	(2) Rulemaking proceeding each new code	(3) Specifically adopted this edition	(4) Uses the NESC to develop own code	(5) Has own code and does not use NESC	(6) Other
						boards or committees and are otherwise specifically exempt from regulation or oversight by this agency. Please note that the Washington Department of Labor and Industries has adopted the NESC in its rules governing electrical worker safety. Please see: http://apps.leg.wa.gov/WAC/default.aspx?cite=296-45-045 The Washington Utilities and Transportation Commission has adopted the NESC in rules governing the construction and installation of telecommunications network facilities. Please see: http://apps.leg.wa.gov/WAC/default.aspx?cite=480-120-402 The UTC's language regarding the version of the NESC which it adopt by reference can be found at: http://apps.leg.wa.gov/WAC/default.aspx?cite=480-120-999 The UTC has not adopted the NESC in rules governing electric company operations, primarily because the rules adopted by the state Department of Labor and Industries already cover this.
WV	Yes	No	NA	No	No	
WI	*	*	*	*	*	
WY	Yes	No	2007	No	No	

NOTE: The information from this survey was compiled and distributed for informational purposes only. This information is not intended to provide an interpretation of the data received. The IEEE is not responsible for verifying the accuracy of information provided by the Commissions.

* Did not respond to survey